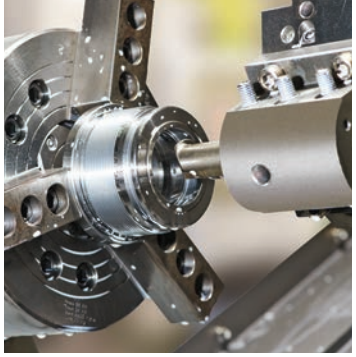













Heavy Duty Hydraulic Cylinders

Series 2H / 2HD / 2HB & 3H / 3HD / 3HB

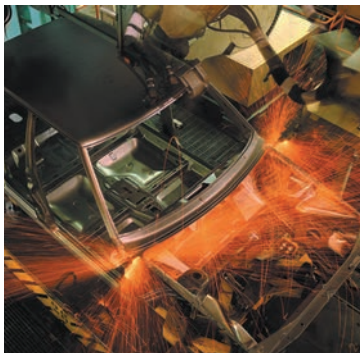

Parker

ENGINEERING YOUR SUCCESS.

Parker Hannifin's Cylinder Division offers products that are designed to meet and exceed the most demanding application requirements. Our extensive hydraulic cylinder product line offers OEM's and End Users cylinder solutions that provide value through reduced maintenance, increased productivity, and long service life. Parker Cylinder's wide breadth of product encompasses NFPA, ISO, and Custom designed products in a multitude of configurations and sizes.



Series CHE
- 20 through 100mm Bore Sizes
- Stroke Lengths to 150mm
- Operating Pressure to 140 bar
- 4 Different Rod Ends Available



Series CHD
- 20 through 80mm Bore Sizes
- Stroke Lengths to 100mm
- Operating Pressure to 207 bar
- 4 Different Rod Ends Available

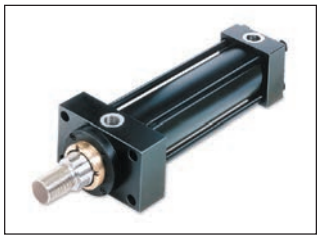

Series HMI
- Bore Sizes 25 through 200mm
- ISO 6020/2 Interchangeable
- 12 Standard Mounting Styles
- 210 Bar Hydraulic Service



Series VH
- 2.50" through 8.00" Bore Sizes
- 13 Standard Mounting Styles
- Larger Ports Than Standard
- 3,000 psi Hydraulic Service



Series 3L
- Bore Sizes 1.00" through 8.00"
- Removable Rod Gland
- 15 Standard Mounting Styles
- 1,000 psi Nominal Hydraulic Service



WaveScale
- Bore Sizes 2.00" through 8.00"
- LDT Feedback
- Integrated Manifolds Available
- Protective Covers Available

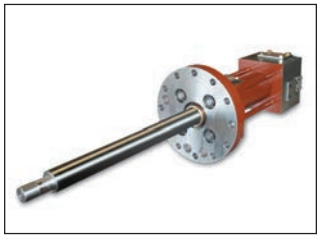

Custom Cylinder
- Bore Sizes to 42.00"
- Stroke Lengths to 70'
- Operating Pressure to 10,000 psi
- Third Party Agency Approval



Cylinder Accessories
- Traditional Cylinder Attachments
- Alignment Aids
- Stainless Steel Attachments

In line with our policy of continuing product improvement, specifications and information contained in this catalog are subject to change.
Copyright ©2020 by Parker Hannifin Corporation. All rights reserved.
PRINTED IN THE U.S.A.

⚠ WARNING

FAILURE OR IMPROPER SELECTION OR IMPROPER USE OF THE PRODUCTS AND/OR SYSTEMS DESCRIBED HEREIN OR RELATED ITEMS CAN CAUSE DEATH, PERSONAL INJURY AND PROPERTY DAMAGE.

This document and other information from the Parker Hannifin Corporation, its subsidiaries and authorized distributors provide product and/or system options for further investigation by users having expertise. It is important that you analyze all aspects of your application, including consequences of any failure and review the information concerning the product or system in the current product catalog. Due to the variety of operating conditions and applications for these products or systems, the user, through its own analysis and testing, is solely responsible for making the final selection of the products and systems and assuring that all performance, safety and warning requirements of the application are met.

The products described herein, including without limitation, product features, specifications, designs, availability and pricing, are subject to change by Parker Hannifin Corporation and its subsidiaries at any time without notice.

Offer of Sale

The items described in this document are hereby offered for sale by Parker Hannifin Corporation, its subsidiaries or its authorized distributors. This offer and its acceptance are governed by provisions stated on a separate page of the document entitled 'Offer of Sale'.

⚠ PROP 65 WARNING

Warning: This product can expose you to chemicals including **Lead and Lead Compounds** which are known to the State of California to cause cancer and birth defects or other reproductive harm. For more information go to www.P65Warnings.ca.gov

Parker Hannifin Corporation
Cylinder Division
Des Plaines, Illinois USA

Table of Contents

⚠PROP 65 WARNING **WARNING:** This product can expose you to chemicals including **Lead and Lead Compounds** which are known to the State of California to cause cancer and birth defects or other reproductive harm.For more information go to www.p65warnings.ca.gov

Newest Design Features of the 2H / 3H Cylinder — pages IV-VIII

Overview — Series 2H / 2HD / 2HB & 3H / 3HD / 3HB — pages 1-7

A Overview

Features and Benefits 2-3
Application Checklist 4
Mounting Styles & Tips for Applying Them 5
2H & 3H Family Model Code / How To Order. 6-7

Series 2H 1.50" - 6.00" Bore / 3H 7.00" & 8.00" Bore — pages 9-47

B Series 2H / Series 3H

2H and 3H Performance 10
2H Specifications, Mounting Styles 11
2H Rod End Styles and Dimensions. 12-13
2H Mount Dimensions 14-30
3H Specifications, Mounting Styles 32
3H Rod End Styles and Dimensions. 33
3H Mount Dimensions 34-47

Series 2HD 1.50" - 6.00" Bore / 3HD 7.00" & 8.00" Bore — pages 49-85

C Series 2HD / Series 3HD

2HD and 3HD Performance 50
2HD and 3HD Specifications, Mounting Styles 51
2HD Rod End Styles and Dimensions 52-53
2HD Mount Dimensions. 54-70
3HD Rod End Styles and Dimensions 71
3HD Mount Dimensions. 72-85

Series 2HB 1.50" - 6.00" Bore / 3HB 7.00" & 8.00" Bore — pages 87-112

D Series 2HB / Series 3HB

2HB and 3HB Performance. 88
2HB and 3HB Specifications, Mounting Styles 89
2HB Rod End Styles and Dimensions 90-91
2HB Mount Dimensions. 92-102
3HB Rod End Styles and Dimensions 103
3HB Mount Dimensions. 104-111
3HB 8" Bore Threaded Flange / Suggested Machining for Mounting Style C 112

Series 3H Large Bore, 10.00" - 20.00" Bore — pages 113-132

E Series 3H / Large Bore

3H Large Bore Performance 114
3H Large Bore Construction 115
3H Specifications / Mountings. 116
3H Piston Rod Ends. 117
3H Large Bore Model Code / How to Order 118-119
3H Piston Seal Selection 120
3H Large Bore Hybrid Composite Bushing 121
3H Large Bore Mount Dimensions 122-132

Cylinder Accessories and Replacement Parts — pages 133-148

F Accessories / Parts

Mounting Accessories 134-137
Style SB & SE Spherical Bearing Mounting Accessories . . 138-139
Linear Alignment Coupler, Split Coupler and Weld Plates. . 140-141
2H / 2HD / 2HB Parts Identification, Torque, Rod Gland, Rod Seal, Piston Seal and Body Seal Kits 142-145
3H / 3HD / 3HB Parts Identification, Torque, Rod Gland, Rod Seal, Piston Seal and Body Seal Kits 146-147
10.00" - 20.00" Bore Series 3H 148-149
Gland and Spanner Wrenches 150

Custom Modifications — pages 149-162

G Custom Modifications

Magnetic Piston, Magnetic Switch Choices 152-153
End-of-Stroke Proximity Switches. 154-157
Water Submersible Option and How to Order 158-159
Buffer Seal Gland, Rod End Styles and Gland Seal Kits. . . 160-161
Metallic Rod Scraper, Crown Wiper, Rod End Boots, Gland Drain and Air Bleeds. 162
Tie Rod Supports, Stroke Adjusters, Thrust Key Mountings, and Metric Piston Rod Thread. 163
Global Shield™ Rod Coating 164

Engineering Data — pages 163-188

H Engineering Data

Theoretical Push & Pull Forces, Cylinder Weights. 166-169
Operating Fluids and Seals / Temperature Range. 170
Fluids and Temperature Range / Pressure Ratings. 171
Piston & Gland Friction / Piston Orifice. 172-173
Ports, Stroke Data, Mounting Groups and Stop Tubing. . . . 174-177
Piston Rod Selection Data. 178-180
Cushioning 181-186
Cylinder Safety Guide 188-189
Offer of Sale 190



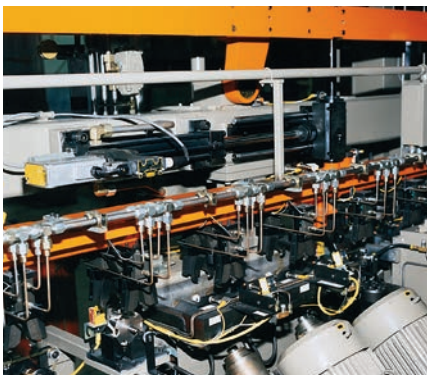



Parker Hannifin is a Fortune 250 global leader in motion and control technologies. For more than 100 years the company has engineered the success of its customers in a wide range of diversified industrial and aerospace markets. Learn more at www.parker.com or @parkerhannifin.

Parker is Engineering

Fluid Power and application expertise provide customers the opportunity to use us as an extension of their design teams. From new system design to improvements required for existing applications, Parker offers unparalleled engineering expertise. We'll help you develop cost saving, high performance solutions that provide value through increased productivity, improved machine efficiency, and reduced downtime.

Our design engineers utilize the highest quality materials and cutting edge manufacturing processes available to push the envelope for performance, value and reliability.

Parker components and systems are made to last. We offer complete system solutions for the following industries:

- Plastics
- Metal Forming
- Steel
- Press
- Off Shore Oil
- Forestry
- Mining
- Entertainment
- Flight Simulation
- Fatigue Testing
- Automation



Worldwide Supplier to Industrial Markets

Parker Hannifin is the world's leading supplier of motion and control technologies that include; motion control products, systems, and complete engineered solutions for industrial markets. Parker's broad and extensive breadth of product offer single source capability with limitless possibilities. Our industrial product solutions range from state of the art stand-alone components to complete engineered systems that are designed to provide value and efficiency to all of our customers. Each component and system is backed up with superior application expertise and technical support that you would expect from Parker Hannifin.

Manufacturing Locations



221 Helicopter Circle • Corona, CA 92880 • Tel.: (951) 280-3800
Fax: (951) 280-3808 • Fax: (800) 869-9886



715 South Iroquois Street • Goodland, IN 47948
Tel.: (219) 297-3182 • Fax: (800) 328-8120



1300 Six Flags Road • Lithia Springs, GA 30122
Tel.: (770) 819-3400 • Fax: (800) 437-3498



29289 Airport Road • Eugene, OR 97402-0079
Tel.: (541) 689-9111 • Fax: (541) 688-6771 • Fax: (800) 624-7996



900 Plymouth Road • Plymouth, MI 48170
Tel.: (734) 455-1700 • Fax: (734) 455-1007

Series 2H / 3H Design Improvements Increase Reliability

Class 1 service polyurethane rod wiperseal and o-rings as body end seals and rod gland static seal offer superior abrasion and extrusion resistance for longer service life.

High compressive strength non-metallic piston wear rings, that minimize tube scoring, are standard on all configured piston selections.

Cap cushion performance options are selectable as floating check bushing type for normal applications or solid orifice style for more demanding high speed and load operation.

Cartridge style needle valve with captive micro adjust screw for precision cushion tuning.

Hardened washers under each tie rod nut prevent galling, ensuring correct tie rod pre-stress and pressure envelope integrity.

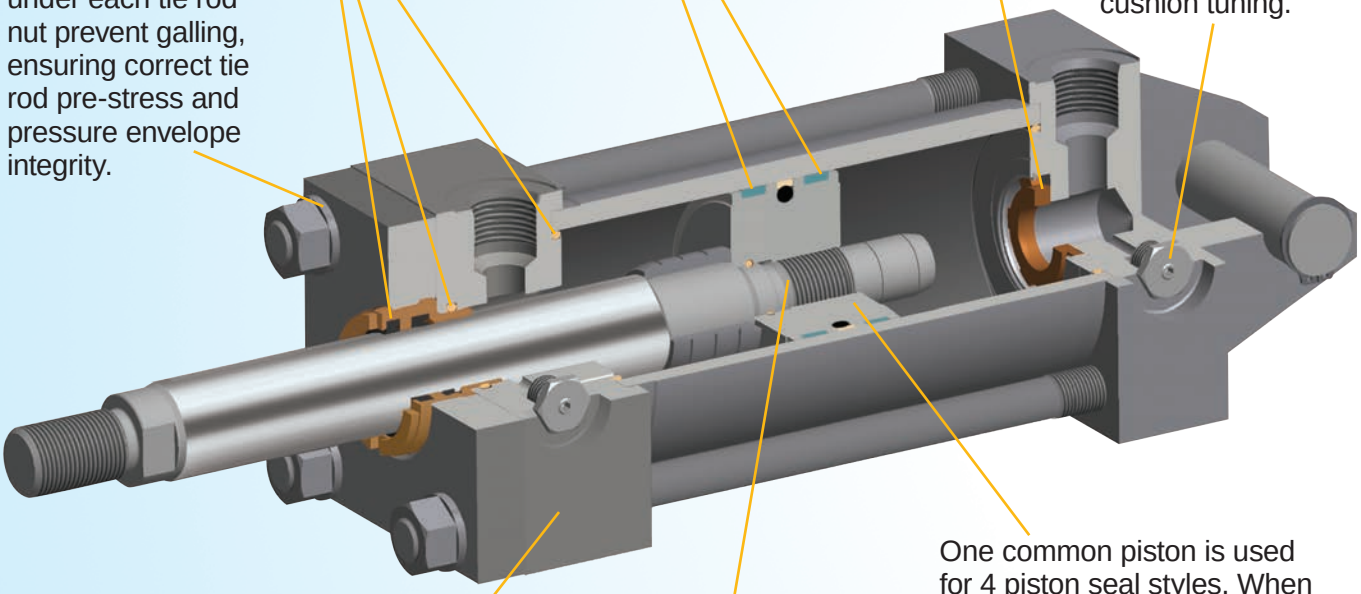

Steel head and cap blocks are precision size, finished on all sides and are bored and grooved for concentric alignment of mating parts.

Piston-to-rod connection is pre-stressed to maximize fatigue life. An o-ring on the piston ID ensures a leak free joint and anaerobic adhesive further secures the threaded connection.

One common piston is used for 4 piston seal styles. When changing operating conditions require a different seal style, the piston and rod assembly is unchanged.

⚠**PROP 65 WARNING** **WARNING:** This product can expose you to chemicals including **Lead and Lead Compounds** which are known to the State of California to cause cancer and birth defects or other reproductive harm. For more information go to www.P65Warnings.ca.gov

One Common Platform – Three Construction Choices

Configurable Gland, Tie Rod & Non-Tie Rod Styles are all available when you need them.

Series 2H & 3H Tie Rod Style with Threaded Jewel Gland

Traditional Parker threaded Jewel gland construction with proven TS2000 rod sealing system. Industrial cylinder standard tie rod construction ensures head and cap remain in contact with tube ends to ensure leak free performance.

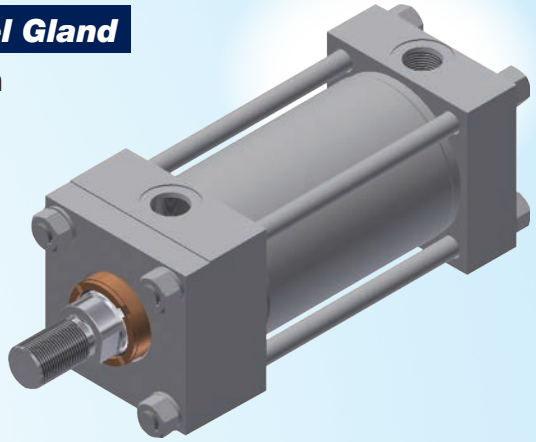

Advantages

- ✓ Rod gland serviceable, using gland and spanner wrenches, without disturbing tie rod torque
- ✓ High strength tie rod material with rolled thread for added strength

Series 2HD & 3HD Tie Rod Style with Bolt-On Gland

Bolt-on gland (see Gland Retention page for bore and mounting availability) with robust Tri-Lip rod sealing system. Industrial cylinder standard tie rod construction ensures head and cap remain in contact with tube ends to ensure leak free performance.

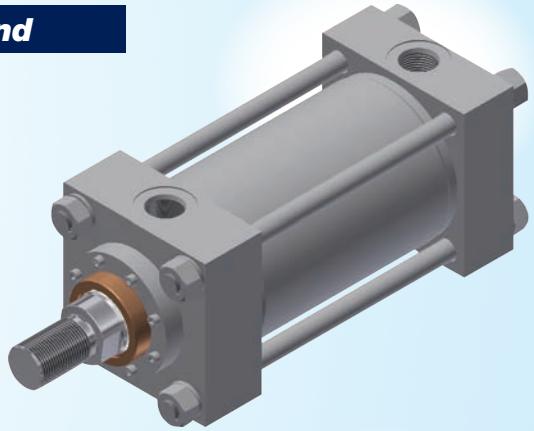

Advantages

- ✓ Rod gland serviceable, using a common hex wrench, without disturbing tie rod torque
- ✓ High strength tie rod material with rolled thread for added strength

Series 2HB & 3HB Non-Tie Rod Style with Bolt-On Gland

Non-tie rod style with bolt-on gland (see Gland Retention page for bore and mounting availability) and robust Tri-Lip rod sealing system. Head and cap are bolted to threaded body flanges.

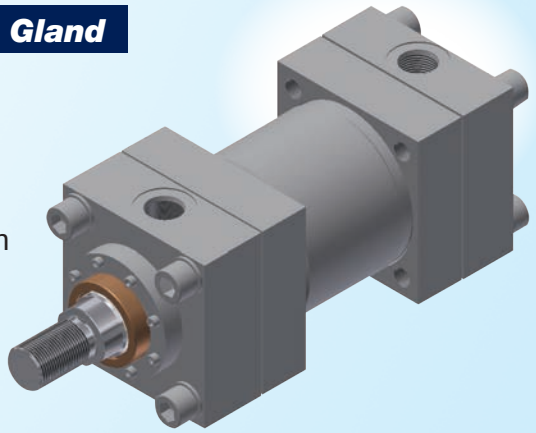

Advantages

- ✓ Improved fatigue life compared to welded flange construction
- ✓ Easier to service than tie rod styles in long strokes
- ✓ Clean appearance improves machine aesthetics
- ✓ Lower weight in long strokes

⚠PROP 65 WARNING **WARNING:** This product can expose you to chemicals including **Lead and Lead Compounds** which are known to the State of California to cause cancer and birth defects or other reproductive harm. For more information go to www.P65Warnings.ca.gov

Piston Sealing Solutions for the Most Demanding Applications

Piston Seal Technology For The 21st Century

Parker's new universal piston seal design addresses the performance balance between low pressure sealability, low friction, extrusion resistance and seal life.

One piston style is used for all piston seal and wear ring configurations and will suit all application requirements. A common piston design permits field changing of seal configuration or seal and wear band material without replacing costly machined components when variations in application parameters occur, such as fluid, temperature or duty cycle.

All piston options include dual non-metallic wear rings to provide maximum stability and bearing area for protection against eccentric loads.

Parker WearGard™ wear rings are internally lubricated for reduced friction and formulated for heavy-duty load-bearing applications.

Parker HP Polyurethane Piston Seal

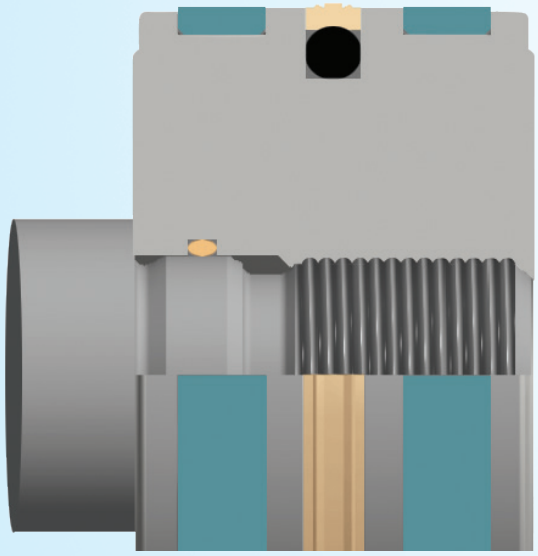

The Parker HP energized bi-directional piston seal improves upon the low friction and long wear of lipseals by including excellent low pressure sealing performance. Specially formulated polyurethane is long wearing and abrasion resistant with running friction comparable to lipseals. An o-ring energizer ensures virtually zero leakage in low pressure applications. Also, pressure trapping that can result with energized lipseals is not possible with a single energized seal.

Parker's HP piston seal is an excellent choice for most industrial applications operating with mineral based hydraulic oil and is available in Seal Classes 1 and 4.

Parker KP Filled PTFE Piston Seal

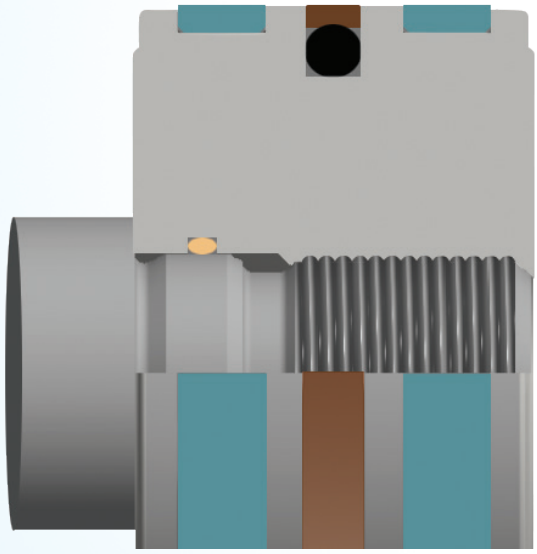

The Parker KP bronze filled PTFE seal ring material has low running friction for accurate positioning in closed loop servo applications.

When combined with a fluorocarbon energizing ring the Parker KP seal is rated for 400° F and will increase service intervals in high temperature applications when compared to fluorocarbon lipseals.

By combining the Parker KP seal with other energizer o-ring compounds and wear ring materials, the KP seal offers excellent service in all Seal Class environments.

⚠**PROP 65 WARNING** **WARNING:** This product can expose you to chemicals including **Lead and Lead Compounds** which are known to the State of California to cause cancer and birth defects or other reproductive harm. For more information go to www.P65Warnings.ca.gov

Selection Guide

Application Demand	HP Seal	KP Seal	RP Seal	WP Seal
Load Holding	Best	Good	Good	Best
Fluid Compatibility	Good	Best	Better	Better
Heat Resistance	Good (200° F Max.)	Best (400° F Max.)	Better (300° F Max.)	Better (250° F Max.)
Dynamic Friction	Best	Best	Good	Better
Breakaway Friction	Good	Best	Good	Better
Extrusion Resistance	Good	Better	Best	Good
Fluid Isolation	N/A	N/A	N/A	Best

Parker RP Thermoplastic Seal

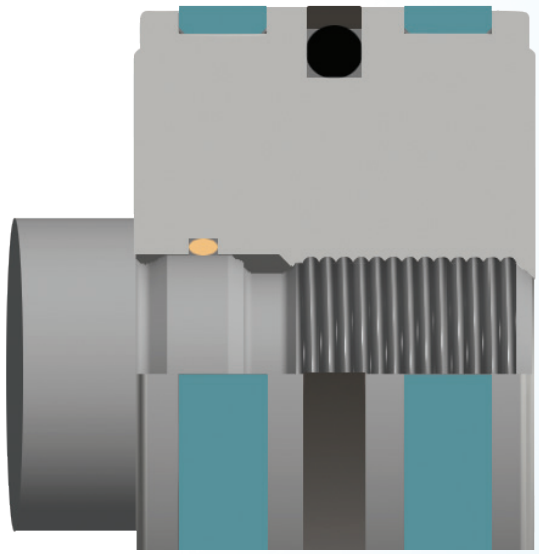

The Parker RP step cut ring is made of self-lubricating, glass reinforced, thermoplastic and is o-ring energized. Unlike cast iron rings that bypass oil, the Parker RP seal provides drift free operation throughout the operating pressure range. This tough seal is fully extrusion resistant, even in the face of extreme pressure spikes, thus ensuring superior wear resistance in the most demanding applications.

Parker RP can operate up to 300° F and is compatible with Seal Classes 1, 2, 3, 4, 5 and 6.

Parker WP Mixed Media Seal

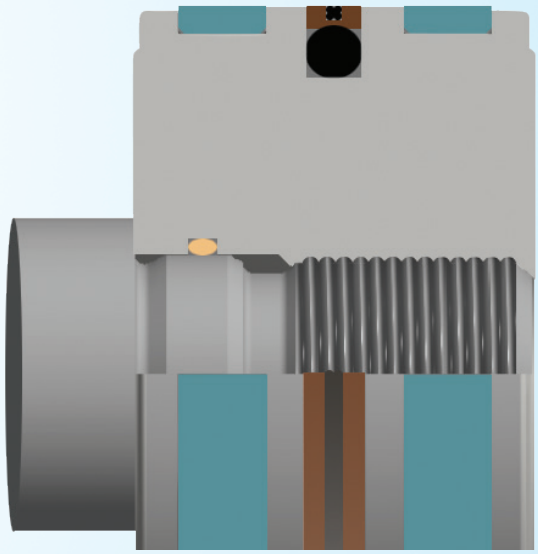

The Parker WP Mixed Media seal is designed for applications requiring different media on either side of the piston. This option is ideal when hydraulic oil is on one side of the piston and air is on the opposite side; and it can be equally effective when dissimilar fluids are on either side of the piston.

Superior low-friction bi-directional sealing is accomplished by combining an energized filled PTFE seal with a redundant elastomer seal. Energizer and redundant elastomer seal materials are available for compatibility with seal classes 1, 2, 3, 5 and 6. Note: WP piston seal groove is not universal in 1.50" bore.

⚠ **PROP 65 WARNING** **WARNING:** This product can expose you to chemicals including **Lead and Lead Compounds** which are known to the State of California to cause cancer and birth defects or other reproductive harm. For more information go to www.P65Warnings.ca.gov

Versatile Piston Rod Sealing Systems Deliver Dry Rod Performance

Parker offers the best performing and broadest selection of rod sealing options. Our TS2000 threaded Jewel Gland sealing system in Series 2H and Tri-lip Bolt-on Gland in Series 2HD / 2HB are proven anchors of the offering.

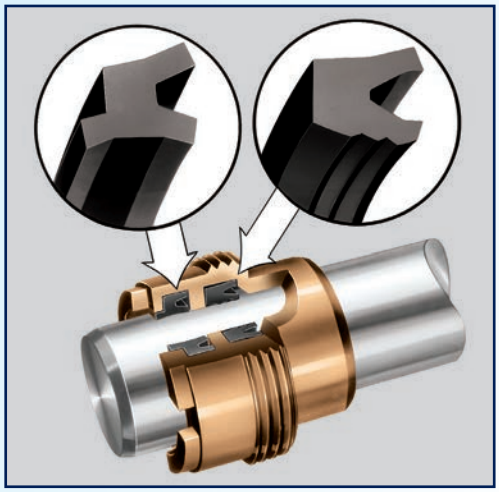

As the rod strokes out, its motion and friction dynamically flex the multi-sealing edges of the TS2000 (shown above) and the Tri-Lip rod seal to maintain their contact with the rod. This provides a cutting action to shear the oil from the rod, allowing the rod to pass out of the rod seal practically dry. Any oil film that remains on the rod is stopped by the inner lip of the Wiperseal and held between it and the rod seal.

On the return stroke any dirt or foreign matter collected on the rod is wiped off by the leading edge, or outer lip of the Wiperseal. At the same time, any oil which may be trapped between the Wiperseal and the rod seal is returned into the cylinder. In other words, we have an automatic check valve that prevents any appreciable amount of oil to leak past the seals, and then returns any oil that has managed to wipe by the rod seal.

Both the TS2000 Jewel Gland and Tri-Lip glands are easily removed for service without loosening tie rods and disturbing the pressure envelope. Material options for both glands allow compatibility with Seal Classes 1, 2, 3, 4, 5 & 6.

Buffer Seal Gland

The Parker Buffer Seal, installed ahead of the primary rod seal, protects the primary seal from the effects of pressure spikes. The result is increased primary rod seal and wiperseal performance life when in severe applications.

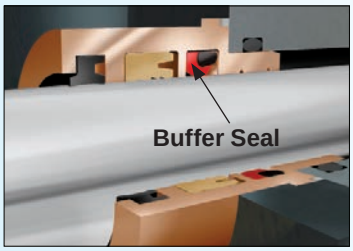

The Parker Buffer Seal is a unique design that allows trapped pressure back into the cylinder. When the rod extends from the cylinder the Buffer Seal is riding on a high compression sealing point to limit leakage. On the retract stroke the seal rocks forward to allow trapped fluid to pass under the seal and return to the system.

Buffer Seals are available with Series 2HD and 2HB Bolt-on gland sealing systems in 1.50” - 8.00” bores. They are available with Seal Classes 1, 2, 3, 4, 5 & 6. Selection of the Buffer Seal is with a code in the cylinder model number.

To accommodate the Buffer Seal, rod bushing length is extended 0.31" to 0.81", depending on rod diameter. See Buffer Seal Gland page 161 for piston rod extension details.

Low Friction Gland

The Parker Low Friction Gland is designed to minimize ‘slip-stick’ and ‘chatter’ in servo and ‘dither’ applications. Two unidirectional bronze filled PTFE primary rod seals and a bronze filled PTFE wiperseal minimize both breakaway and running friction.

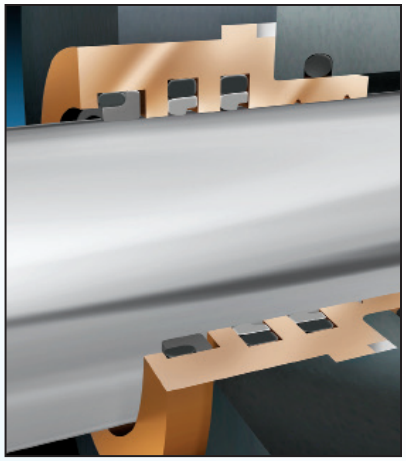

Low Friction Rod Seals are available in both threaded Jewel Gland and Bolt-on gland styles for rod diameters 1.000" - 5.500" in 1.50" - 8.00" bores. They are offered with Seal Classes 1, 2, 3, 4, 5, 6 & 8. Selection of the Low Friction Gland is with a code in the cylinder model number.

See Piston & Gland Friction page for comparative seal friction data.

⚠PROP 65 WARNING **WARNING:** This product can expose you to chemicals including **Lead and Lead Compounds** which are known to the State of California to cause cancer and birth defects or other reproductive harm. For more information go to www.P65Warnings.ca.gov

Section A

Series 2H / 2HD / 2HB & 3H / 3HD / 3HB
Heavy Duty Hydraulic Cylinders

Features and Benefits	2-3
Application Checklist	4
Mounting Styles & Tips for Applying Them	5
2H & 3H Family Model Code / How To Order	6-7

⚠PROP 65 WARNING **WARNING:** This product can expose you to chemicals including **Lead and Lead Compounds** which are known to the State of California to cause cancer and birth defects or other reproductive harm. For more information go to www.P65Warnings.ca.gov

A Overview

The inside story on why Series 2H is your best choice in heavy duty hydraulic cylinders

Align-A-Groove – A 3/16" wide surface machined at each end of the cylinder body. Makes precise mounting quick and easy.

Ports – SAE "O" ring ports are standard.

Optional Ports – NPTF ports are optional at no extra charge. Oversize NPTF and SAE ports are available at extra charge.

Primary Seal – TS2000 Rod Seal is a proven leakproof design – completely self-compensating and self-relieving to withstand variations and conform to mechanical deflection that may occur.

Secondary Seal – Double-Service urethane Wiperseal™ wipes clean any oil film adhering to the rod on the extend stroke and cleans the rod on the return stroke.

Rod Gland Assembly – Externally removable without cylinder disassembly. Long bearing surface is inboard of the seals, assuring positive lubrication from within the cylinder. An o-ring is used as a seal between gland and head, and also serves as a prevailing torque-type lock.

Piston Rod Thread – Male rod end styles #4A and #8A are integral cut threads on the piston rod. Optional studded KK small male thread, for piston rod diameters 2.000" and smaller, is available by specifying rod end style #4H

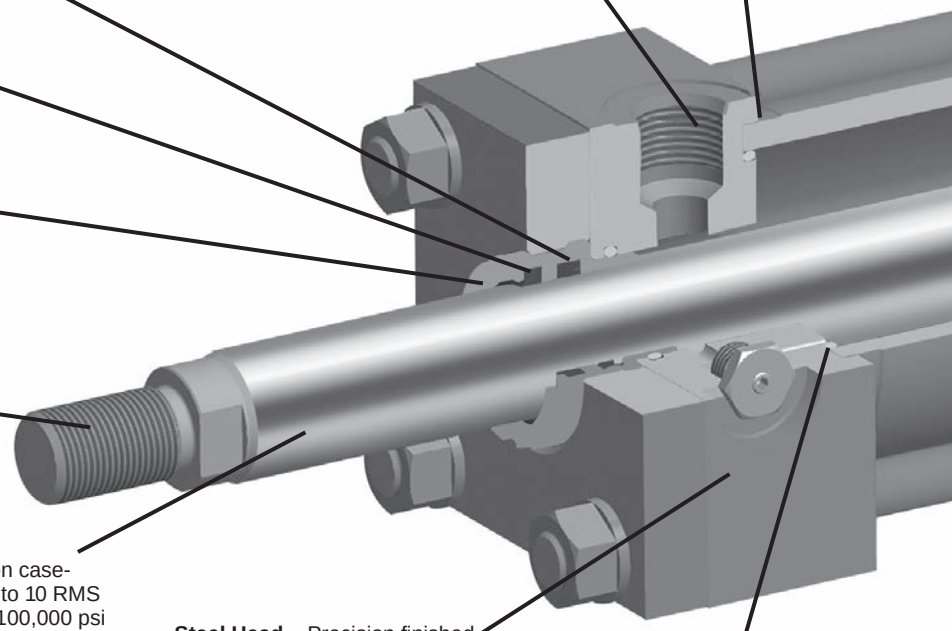

Piston Rod – Medium carbon steel, induction case-hardened, hard chrome-plated and polished to 10 RMS finish. Piston rods are made from 85,000 to 100,000 psi minimum yield material in .625" through 4.000" diameters. Larger diameters vary between 57,000 and 90,000 psi minimum material, depending on rod diameter.

Steel Head – Precision finished on all sides; bored and grooved to provide concentricity for mating parts.

End Seals – Pressure-actuated cylinder body-to-head and cap o-rings.

Parker's Exclusive Stepped floating cushions combine the best features of known cushion technology.

Deceleration devices or built-in "cushions" are optional and can be supplied at head end, cap end, or both ends without change in envelope or mounting dimensions. Parker cylinder cushions are a stepped design and combine the best features of known cushion technology.

Standard straight or tapered cushions have been used in industrial cylinders over a very broad range of applications. Parker research has found that both designs have their limitations.

As a result, Parker has taken a new approach in cushioning of industrial hydraulic cylinders and for specific load and velocity conditions have been able to obtain deceleration curves that come very close to the ideal. The success lies in a stepped sleeve or spear concept where the steps are calculated to approximate theoretical orifice area curves.

In the cushion performance chart, pressure traces show the results of typical orifice flow conditions. Tests of a three-step sleeve or spear show three pressure pulses coinciding with the steps. The deceleration cushion plunger curves shape comes very close to being theoretical, with the exception of the last 1/2 inch of travel. This is a constant shape in order to have some flexibility in application. The stepped cushion design shows reduced pressure peaks for most load and speed conditions, with comparable reduction of objectionable stopping forces being transmitted to the load and the support structure.

All Parker Hannifin cushions are adjustable.

The Series 2H cylinder design incorporates the longest cushion sleeve and cushion spear that can be provided in the standard envelope without decreasing the rod bearing and piston bearing strengths.

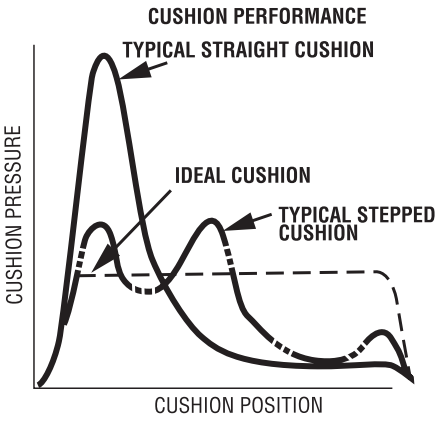

⚠PROP 65 WARNING **WARNING:** This product can expose you to chemicals including **Lead and Lead Compounds** which are known to the State of California to cause cancer and birth defects or other reproductive harm. For more information go to www.P65Warnings.ca.gov

Adjustable Floating Stepped Cushions – For maximum performance – economical and flexible for even the most demanding applications – provides superior performance in reducing shock. Cushions are optional and can be supplied at head end, cap end, or both ends without change in envelope or mounting dimensions.

Steel Cap – Precision finished on all sides; bored and grooved to provide concentricity for mating parts.

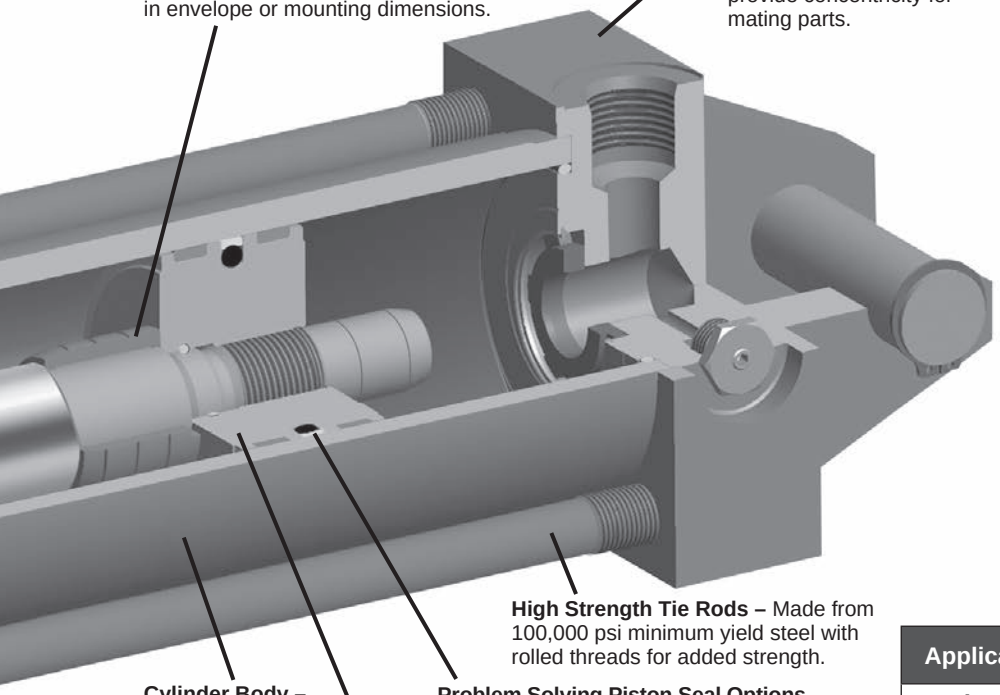

High Strength Tie Rods – Made from 100,000 psi minimum yield steel with rolled threads for added strength.

Cylinder Body – Heavy-wall steel tubing, honed to a micro finish bore.

Problem Solving Piston Seal Options – Parker's new piston seal designs address the performance balance between low pressure seal ability, low friction, extrusion resistance and seal life.

One-Piece Nodular Iron Piston – Two non-metallic wear bands that minimize tube scoring are standard with all seal styles. Piston to rod connection is pre-stressed to maximize fatigue life. An o-ring on the piston ID ensures a leak free joint and anaerobic adhesive further secures the threaded connection.

One Common Piston for 4 Seal Styles

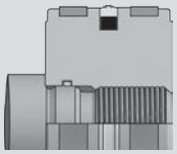

Standard HP style with polyurethane piston seal – excellent for most cycling and load holding applications.

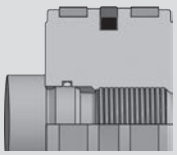

Optional KP style with filled PTFE piston seal – low friction, high heat resistance for cycling and load holding service.

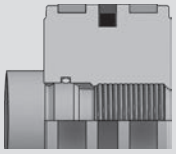

Optional RP style with thermoplastic piston seal – superior extrusion resistance to extreme pressure spikes with drift-free performance.

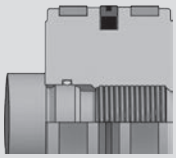

Optional WP style mixed media piston seal – low friction primary seal with redundant elastomer delivers superior performance with dissimilar media on either side of the piston.

Application Demand	HP Seal	KP Seal	RP Seal	WP Seal
Load Holding	Best	Good	Good	Best
Fluid Compatibility	Good	Best	Better	Better
Heat Resistance	Good	Best	Better	Better
Dynamic Friction	Best	Best	Good	Better
Breakaway Friction	Good	Best	Good	Better
Extrusion Resistance	Good	Better	Best	Good
Fluid Isolation	N/A	N/A	N/A	Best

(1) When a cushion is specified at the head end:

a. A self-centering stepped sleeve is furnished on the piston rod assembly.

b. A cartridge style needle valve is provided that is flush with the side of the head even when wide open. It is located on side number 2, in all mounting styles except D, DB, DD, DE, JJ, and HH. In these styles it is located on side number 3.

c. All cylinder bores utilize a slotted sleeve as a check valve.

(2) When a cushion is specified at the cap end:

a. A stepped cushion spear is provided on the piston rod.

b. A "float check" self-centering bushing is provided in 1.50" - 6.00" bore cylinders, which incorporates a large flow check valve for fast "out-stroke" action. 7.00" bore and larger cylinders utilize a springless check valve located and identified in the same manner as the head end.

c. A cartridge style needle valve is provided that is flush with the side of the cap when wide open. It is located on side number 2 in all mounting styles except D, DB, DD, DE, JJ, and HH. In these styles it is located on side number 3.

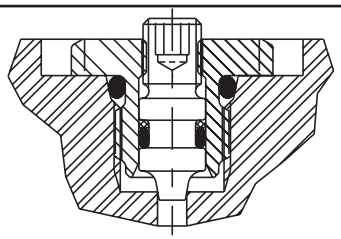

Cartridge Style Needle Valve

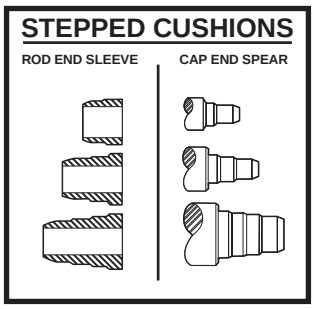

⚠PROP 65 WARNING **WARNING:** This product can expose you to chemicals including **Lead and Lead Compounds** which are known to the State of California to cause cancer and birth defects or other reproductive harm. For more information go to www.P65Warnings.ca.gov

Application Checklist

The following checklist should be used to select the best possible cylinder for a given application. Additional information can be referenced in the following pages to help assist in this process. In the event that you have additional questions or concerns, or if more information is required, please contact your local Parker distributor or our customer service representatives for assistance.

1. Establish the system requirements ..... Series 2H

- How heavy is the load to be moved?
- What is the nominal operating pressure of the system?
- How far does the load have to move?
- What is the speed at which the load will move?
- What is the fluid type and the temperature to which the cylinder will be exposed?

2. Mounting Style ..... Pages 5 & 174

- Determine the best mounting style for the application.
- If your application requires a mounting style that is not exactly matched by one of our catalog offerings, we can supply the mounting you need. If the required mounting resembles one of our standards, specify that style, enter 'S' in the Special Modification field and provide a dimension drawing of your mount. Special mounting styles that do not resemble a standard style will be designated as style TX by the factory.

3. Cylinder Bore and Operating Pressure ..... Pages 164-165

- Review the theoretical push and pull force for a given bore size to determine.

4. Piston Rod ..... Pages 176-178

- Determine what rod size will be required to avoid buckling.
- Determine if a single or double rod cylinder is required.
- Determine the rod end style and rod end thread.
- Will stop tubing be required?

5. Piston Seals ..... Pages VI and VII

- Determine the best seal type for your application. All selections are high load style that include dual non-metallic wear bands straddling the piston seal.
- **Parker HP** polyurethane piston seal can hold a load in position and is your best choice for general industrial applications utilizing mineral based fluids in Seal Classes 1 & 4.
- **Parker KP** filled PTFE piston seal is our lowest friction and highest heat resistance (up to 400° F) offering that will hold a load in position and can withstand high load and is available in all Seal Classes.
- **Parker RP** self-lubricating, reinforced, heat-stabilized thermoplastic piston seal has the highest resistance to extrusion in extreme pressure spike conditions, can hold a load in position and has long wear characteristics comparable to cast iron rings. RP seals are available in Seal Classes 1, 2, 3, 4 and 6.
- **Parker WP** mixed-media piston seal is for applications requiring different media on either side of the piston and is ideal with hydraulic fluid on one side of the piston and compressed air on the opposite side. WP seals are available in Seal Classes 1, 2, 3, 5 and 6.

6. Cushioning ..... Pages 179-184

- Determine if cushions are required to safely stop the load.
- Determine whether optional solid cap cushion construction should be selected over standard floating cushion bushing style.

7. Ports ..... Pages 172-173

- Select the best possible port size for a given speed requirement.
- Select port position.

8. Piston rod and mounting accessories ..... Pages 132-139

- Determine how you will attach the cylinder to the load.

9. Custom modifications ..... Pages 149-162

⚠**PROP 65 WARNING** **WARNING:** This product can expose you to chemicals including **Lead and Lead Compounds** which are known to the State of California to cause cancer and birth defects or other reproductive harm. For more information go to www.P65Warnings.ca.gov

Mounting Styles & Tips for Applying Them

Extended Tie Rod Mountings – TB, TC, and TD

Application:

- Straight line force transfer
- Compression loads (push) – use TC or TD
- Tension loads (pull) – use TB or TD

Advantages:

- Ease of mounting in tight spaces
- Force is transferred along the centerline of the cylinder

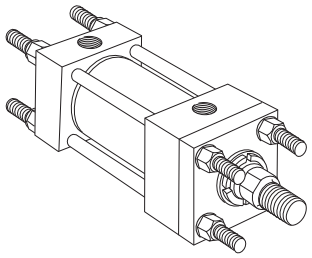

Flange Mountings – J, JB, JJ, H, HB, and HH

Application:

- Straight line force transfer
- Compression loads (push) – use H, HB or HH
- Tension loads (pull) – use J, JB, or JJ

Advantages:

- Rigid base mounting due to large flange area
- Force is transferred along the centerline of the cylinder

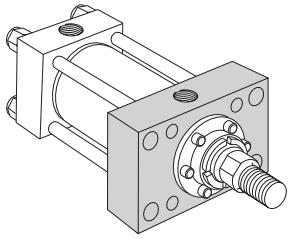

Side Tap Mounting – F / Side Lug Mounting – C

Application:

- Straight line force transfer
- Can be used in compression or tension loads
- Thrust key and secure mounting area are vital

Advantages:

- Ease of mounting

Recommendation:

- Styles F & C should have a minimum stroke at least equal to the bore diameter

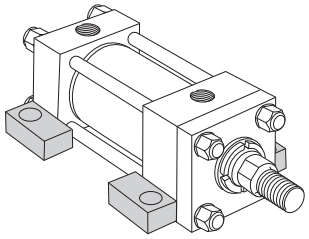

Pivot Mountings – BB, SB and SE

Application:

- Curved or arc line force transfer
- Can be used in compression or tension loads
- Movement in a simple arc – use BB mountings
- Movement in a compound arc – use SB or SE mountings

Advantages:

- Ease of mounting
- Design flexibility
- Self aligning (SB or SE)

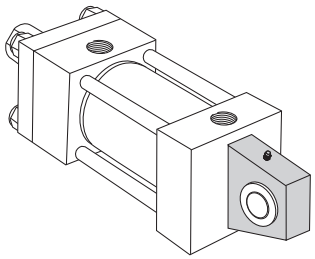

Trunnion Mountings – D, DB, DD and DE

Application:

- Curved or arc line force transfer
- Can be used in compression or tension loads
- Compression loads – use DB or DD, DE mountings
- Tension loads – use D, DD or DE mountings

Advantages:

- Ease of mounting
- Design flexibility
- Self aligning

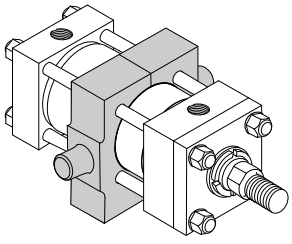

⚠**PROP 65 WARNING** **WARNING:** This product can expose you to chemicals including **Lead and Lead Compounds** which are known to the State of California to cause cancer and birth defects or other reproductive harm. For more information go to www.P65Warnings.ca.gov

A Overview

2H & 3H Family Model Code

5.00	C	K	F	P	TB	2H	H	N	A
Bore Dia.	Cushion Head	Double Rod End Cylinder	Mounting Style	Mounting Modification	Combination Mounting Style[5]	Series Designator	Piston Seal	Piston Magnet	Gland & Seal

Bore Dia. — Specify bore dia. in inches: 1.50, 2.00, 2.50, 3.25, 4.00, 5.00, 6.00, 7.00, 8.00

Cushion Head — Use "C" only if head end cushion is required.

Double Rod End Cylinder — Use "K" only if a double rod end cylinder is required.[1]

Mounting Style

Mounting style offering varies by series. See 'Standard Specifications' pages for availability.

- T = Basic, No Mount
- TB = Tie Rods Extended Head
- TC = Tie Rods Extended Cap
- TD = Tie Rods Extended Both Ends
- J = Head Rectangular Flange
- JB = Head Square Flange
- JJ = Head Rectangular
- H = Cap Rectangular Flange
- HB = Cap Square Flange
- HH = Cap Rectangular
- C = Side Lug[2]
- F = Side Tapped[2]
- BB = Cap Fixed Clevis
- D = Head Trunnion
- DB = Cap Trunnion
- DD = Intermediate Fixed Trunnion[3]
- DE = Heavy Duty Intermediate Fixed Trunnion[3]
- SB = Spherical Bearing
- SE = Heavy Duty Spherical Bearing
- TX = Special Mounting (Consult Factory)[4]

Mounting Modification

- P = Use only if Thrust Key required. (Style C or F.)
- M = Use only for Manifold Port O-Ring Seal. Applies to C Mount only.

Combination Mounting Style[5] — Any practical mounting style listed.

Series Designator

- 1.50"-6.00" Bore 2H, 2HD, 2HB
- 7.00"-8.00" Bore 3H, 3HD, 3HB

Piston Seal

- H = Parker HP (standard) Piston Seal
- K = Parker KP (universal) Piston Seal[6]
- R = Parker RP (extrusion resistant) Piston Seal
- W= Parker WP (mixed media) Piston Seal

Piston Magnet

- N = No Magnet
- 3 = Magnet Piston with SS Cylinder Tube for Global Switches
- 7 = Magnet with Carbon Steel Cylinder Tube for ALS Switches

Gland & Seal

2H & 3H

- A = Threaded Jewel Gland with TS2000 Rod Seal (for Class 1 service) – additional Seal Classes are available

2HD, 2HB, 3HD, 3HB

- H = Bolt-on Gland Class 1 Service Standard. Additional Seal Classes are available. See Seal Code for details.
- K = Bolt-on Lipseal Gland with Buffer Seal (Not available 0.625" rod)

All Series

- F = Gland with dual PTFE Rod Seals and PTFE Wiperseal[6] (Low Friction)

Series 2HB & 3HB Minimum Stroke Table

Bore Ø	All Mounting Styles Except DD & DE	Mounting Styles DD & DE
1.50	1.062	2.875
2.00	1.562	3.750
2.50	1.437	3.625
3.25	1.687	4.375
4.00	1.937	5.000
5.00	1.937	5.437
6.00	2.562	6.687
7.00	3.437	8.062
8.00	2.937	8.250

Shaded boxes identify required model number fields.

[1] Available mounting styles for K Type cylinders are located at the end of Section A. When ordering a double rod end cylinder, the piston rod number and piston rod end threads are to be specified for both rod ends.

The model number should be created as viewing the primary rod end on the left hand side.
Example: K Type Cylinder:
4.00CKTD2HLT14A28AC10.000

[2] Mounting Styles C and F should have a minimum stroke length equal to or greater than their bore size.

[3] Specify XI dimension.

[4] Special mounting styles that do not resemble a standard catalog offering will be designated as style TX by the factory. See page 4 for instructions to enter a mounting that resembles a standard style.

[5] In general, the model numbers as read left to right corresponding to the cylinder as viewed from left to right with the primary end at the left. The second or subsequent mountings are mountings called out as they appear in the assembly moving away from the rod end. Except when tie rod extension mountings are part of a combination, all combinations should have a "S" (Special) in the model code and a note in the body of the order clarifying the mounting arrangement. The "P", as used to define a thrust key is not considered to be a mounting. However it is located at the primary end.

[6] Piston seal code K and Gland & Seal code F must be selected for Class 8 service. Dual PTFE rod seals with PTFE wiperseal not available for 0.625" rod.

⚠PROP 65 WARNING **WARNING:** This product can expose you to chemicals including **Lead and Lead Compounds** which are known to the State of California to cause cancer and birth defects or other reproductive harm. For more information go to www.P65Warnings.ca.gov

2H & 3H Family Model Code

T	1	S	1	4	2	A	C	16.000
Port Type	Seals	Special Modification	Piston Rod Number[9]	Piston Rod End	Piston Rod Alternate Thread[12]	Piston Rod Threads	Cushion Cap	Stroke[8]

Seals
- 1 = Standard Seals
- 2 = Water Base Fluid Seals
- 3 = EPR Seals
- 4 = Low Temperature Seals
- 5 = Fluorocarbon Seals
- 6 = High Water Content Fluid
- 8 = Energized PTFE Seals
- E = Fluorocarbon Seals – Piston Rod only
- N = High Temperature Rod Gland[7]

Special Modification
Use only if special modifications are required:
- Oversize Ports
- Port Position Change
- Special Seals
- Stop Tube[8]
- Stroke Adjusters
- Tie Rod Supports
- Other

Piston Rod Number[9]
1, 2, 3, 4, 5

Piston Rod Alternate Thread[12]
Use only for male thread two times longer than standard.

Cushion Cap
- C = Standard Floating Cushion Bushing Design
  1.50" - 6.00" Bore
- F = Solid Cap Orifice Design

Stroke[8]
Specify in inches

Piston Rod Threads
- A = UNF Standard Integral Cut Thread
- H = UNF Optional High Strength Stud (Style 4 through 2.000" rod only)
- M = Metric[13]
- N = No Thread[14]

Piston Rod End

4	=	Style 4 Small Male
4B	=	Style 4 Small Male with Buffer Seal Gland
7	=	Style 7 Female Thread for Spherical Rod Eye for Piston Rod Codes larger than Code #1 (Style SB only)
7B	=	Style 7 Female Thread with Buffer Seal Gland
8	=	Style 8 Intermediate Male
8B	=	Style 8 Intermediate Male with Buffer Seal Gland
9	=	Style 9 Short Female[10]
9B	=	Style 9 Short Female[10] with Buffer Seal Gland
55	=	Style 55 Rod End for Flange Coupling
55B	=	Style 55 Rod End with Buffer Seal Gland
3	=	Style 3 Special (Specify)[11]
3B	=	Style 3 Special (Specify)[11] with Buffer Seal Gland

Port Type
- T = SAE Straight Thread O-Ring (Std.)
- U = NPTF Ports (Dry Seal Pipe Thread)
- R = BSP Ports (Parallel Thread ISO 228)
- P = SAE 4-Bolt Flange Ports (3,000 psi)
- B = BSPT Ports (Taper Thread)
- G = Metric Thread Ports
- Y = Metric Thread Ports per ISO 6149
- M = Used only for Manifold Port O-ring Seal. M option must be specified (Mounting Modification), applies to Mounting Style C only.

Shaded boxes identify required model number fields.

[7] Energized PTFE rod seals & wiperseal. All other cylinder seals are fluorocarbon. Not available for 0.625" rod.

[8] S = Stop Tube. Specify: stop tube length, net stroke and gross stroke. Gross stroke = stop tube length + net stroke. Gross stroke to be placed in the model number field.

Example:

2.000 inches long stop tube
+14.000 inches net stroke
16.000 inches gross stroke

See tables on these pages for minimum allowable strokes for Series 2HB and Piston Rod End Styles 9 & 9B.

[9] Refer to Rod buckling chart in Section H to assure rod number selected will not buckle under load.

[10] Style 9 stroke restrictions may apply. See Style 9 Minimum Stroke Table for details.

[11] Provide dimensions for KK, A, W or WF. If otherwise special, furnish dimensioned sketch.

[12] Available only in combination with Style 4 or Style 8.

[13] See Section G for detailed information regarding standard metric rod end thread sizes.

[14] Must be specified for Piston Rod End Style 55.

Style 9 Minimum Stroke Table

Bore Ø	Rod Ø	Minimum Stroke	
		Style 9	Style 9B
1.50 - 4.00	All	None	None
5.00	2.000	None	None
	2.500	1.000	0.56
	3.000	1.375	1.94
	3.500	1.625	1.19
6.00	2.500	None	None
	3.000	1.375	0.94
	3.500	1.375	0.94
	4.000	2.000	1.56
7.00	3.000	1.250	0.81
	3.500	1.500	1.06
	4.000	1.500	1.06
	4.500	2.500	2.06
	5.000	3.125	2.31
8.00	3.500	1.500	1.06
	4.000	1.500	1.06
	4.500	2.375	1.94
	5.000	2.875	2.06
	5.500	3.625	2.81

⚠PROP 65 WARNING **WARNING:** This product can expose you to chemicals including **Lead and Lead Compounds** which are known to the State of California to cause cancer and birth defects or other reproductive harm. For more information go to www.P65Warnings.ca.gov

Notes

⚠**PROP 65 WARNING** **WARNING:** This product can expose you to chemicals including **Lead and Lead Compounds** which are known to the State of California to cause cancer and birth defects or other reproductive harm. For more information go to www.P65Warnings.ca.gov

Section B

Series 2H 1.50" - 6.00" / 3H 7.00" & 8.00" Bore
Heavy Duty Hydraulic Cylinders

	2H 1.50" - 6.00" Bore	3H 7.00" & 8.00" Bore
Performance	10	10
Specifications, Mounting Styles	11	32
Rod End Styles and Dimensions	12-13	33
T, TD, TB, TC Mount Dimensions	14	34
J Mount Dimensions	15	35
JB Mount Dimensions	16	36
JJ Mount Dimensions	17	37
H Mount Dimensions	18	38
HB Mount Dimensions	19	39
HH Mount Dimensions	20	39
C Mount Dimensions	21	40
F Mount Dimensions	22	40
BB Mount Dimensions	23	41
D Mount Dimensions	24	42
DB Mount Dimensions	25	43
DD Mount Dimensions	26	44
DE Mount Dimensions	27	45
Style SB Spherical Bearing Mounting	28	–
Style SE Spherical Bearing Mounting	29	46
Double Rod Cylinders	30	47

⚠**PROP 65 WARNING** **WARNING:** This product can expose you to chemicals including **Lead and Lead Compounds** which are known to the State of California to cause cancer and birth defects or other reproductive harm. For more information go to www.P65Warnings.ca.gov

Parker Series 2H 1.50"-6.00" and 3H 7.00" & 8.00" Bore Heavy Duty Hydraulic Cylinder

Series 2H 1.50"-6.00" and 3H 7.00" & 8.00" Bore cylinders set the standard for performance, durability, and trouble free operation. Parker's superior design, the use of high quality materials and stringent manufacturing practices provide all customers with long cylinder service life and reduced operating costs. Design features such as the "Jewel" rod gland, hard chrome plated piston rods, and stepped cushions provide increased machine productivity through reduced downtime, faster cycle times, and improved system efficiency. Every Parker cylinder is individually tested before leaving our plant to assure proper performance and leak free operation. All Parker Cylinder products carry an eighteen month warranty.

Select Parker Series 2H and 3H cylinders for your hydraulic cylinder requirements. Parker Series 2H and 3H will provide the value and performance you need for all of your industrial hydraulic application demands.



Parker "Jewel" Gland with TS2000 Sealing System

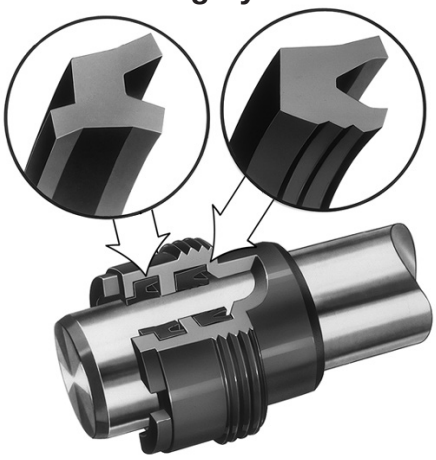

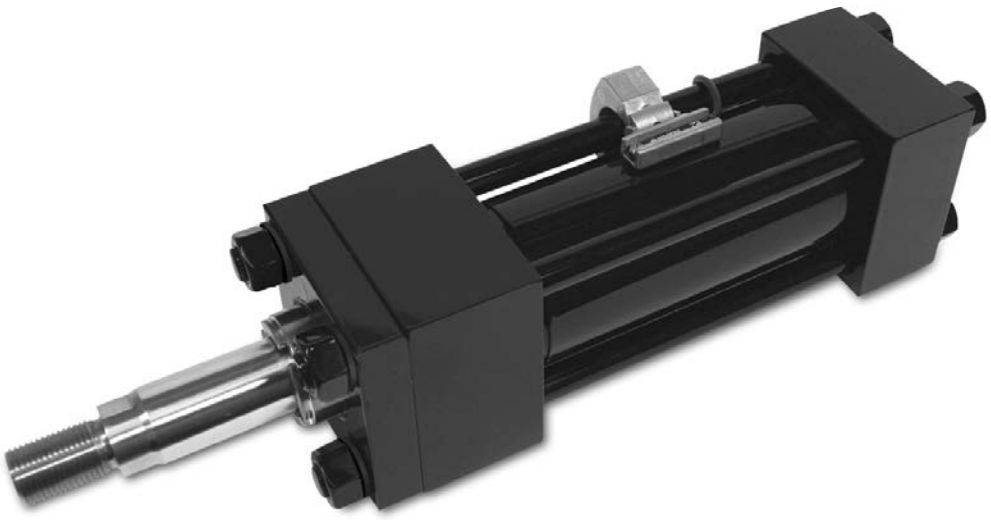

⚠**PROP 65 WARNING** **WARNING:** This product can expose you to chemicals including **Lead and Lead Compounds** which are known to the State of California to cause cancer and birth defects or other reproductive harm. For more information go to www.P65Warnings.ca.gov

Standard Specifications

- Heavy Duty Service – ANSI/(NFPA) T3.6.7R3 - 2009 Specifications and Mounting Dimension Standards
- Standard Construction – Square Head – Tie Rod Design
- Nominal Pressure – 3000 psi[1]
- Standard Fluid – Hydraulic Oil
- Standard Temperature – -10°F to +165°F[2]
- Bore Diameters – 1.50" through 6.00" (Larger sizes available)
- Piston Rod Diameter – 0.625" through 4.000"
- Mounting Styles – 19 standard styles at various application ratings
- Strokes – Available in any practical stroke length
- Cushions – Optional at either end or both ends of stroke. "Float Check" design is standard at cap end.
- Rod Ends – Four Standard Choices – Specials to Order

In line with our policy of continuing product improvement, specifications in this catalog are subject to change.

Note: Series 2H Hydraulic Cylinders fully meet ANSI/(NFPA) T3.6.7R3 - 2009 Specifications and Mounting Dimension Standards for Square Head Industrial Fluid Power Cylinders.

[1] If hydraulic operating pressure exceeds 3000 psi, send application data for engineering evaluation and recommendation. See Section H for actual design factors.

[2] See Section H for higher temperature service.

Available Mounting Styles

Most of the illustrated mounting styles below are available in double rod cylinders.

Basic
Style T
1.50" - 6.00"
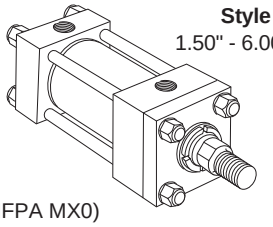
(NFPA MX0)

Tie Rods Extended Head End
Style TB
1.50" - 6.00"
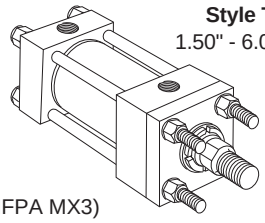
(NFPA MX3)

Tie Rods Extended Cap End
Style TC
1.50" - 6.00"
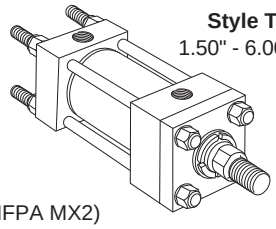
(NFPA MX2)

Tie Rods Extended Both Ends
Style TD
1.50" - 6.00"
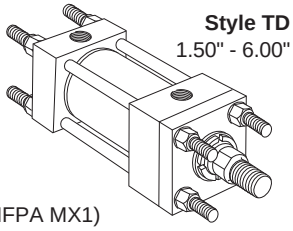
(NFPA MX1)

Head Rectangular Flange
Style J
1.50" - 6.00"
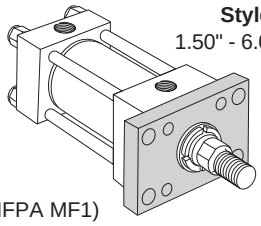
(NFPA MF1)

Head Square Flange
Style JB
1.50" - 6.00"
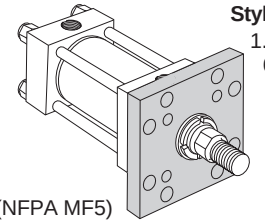
(NFPA MF5)

Head Rectangular
Style JJ
1.50" - 6.00"
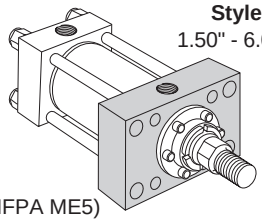
(NFPA ME5)

Cap Rectangular Flange
Style H
1.50" - 6.00"
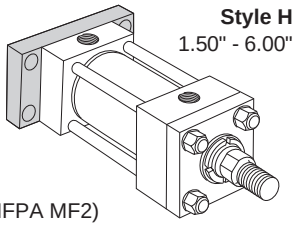
(NFPA MF2)

Cap Square Flange
Style HB
1.50" - 6.00"
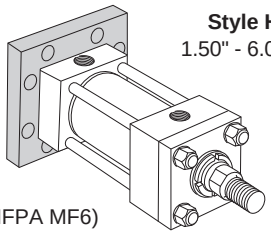
(NFPA MF6)

Cap Rectangular
Style HH
1.50" - 6.00"
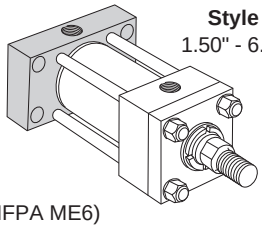
(NFPA ME6)

Side Lug
Style C
1.50" - 6.00"
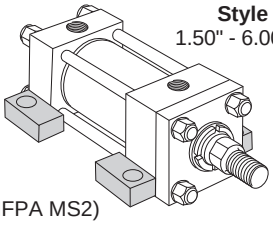
(NFPA MS2)

Side Tapped
Style F
1.50" - 6.00"
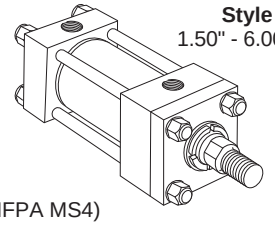
(NFPA MS4)

Cap Fixed Clevis
Style BB
1.50" - 6.00"
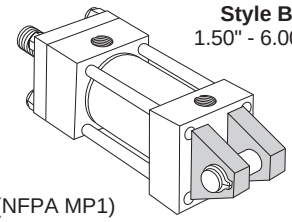
(NFPA MP1)

Head Trunnion
Style D
1.50" - 6.00"
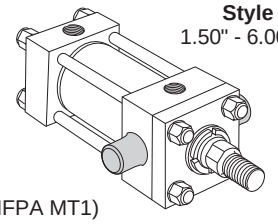
(NFPA MT1)

Cap Trunnion
Style DB
1.50" - 6.00"
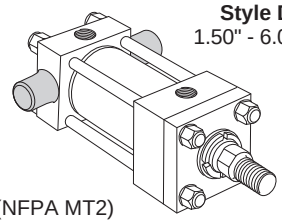
(NFPA MT2)

Intermediate Fixed Trunnion
Style DD
1.50" - 6.00"
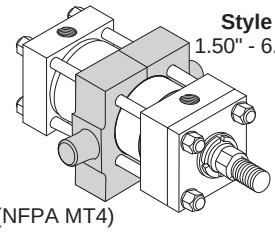
(NFPA MT4)

HD Intermediate Fixed Trunnion
Style DE
4.00" - 6.00"
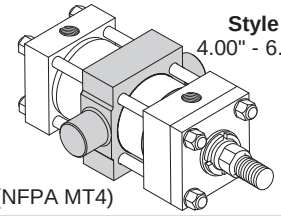
(NFPA MT4)

Spherical Bearing
Style SB
1.50" - 6.00"
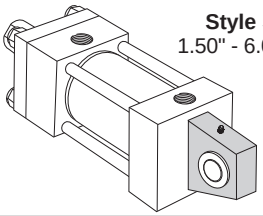

HD Spherical Bearing
Style SE
1.50" - 6.00"
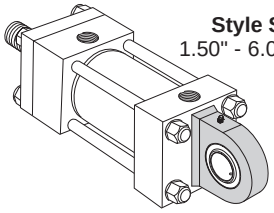

Double Rod Cylinders
Style KT Shown
1.50" - 6.00"
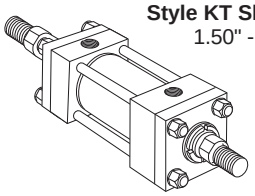

⚠PROP 65 WARNING **WARNING:** This product can expose you to chemicals including **Lead and Lead Compounds** which are known to the State of California to cause cancer and birth defects or other reproductive harm. For more information go to www.P65Warnings.ca.gov

Rod End Dimensions

Thread Style 4 (NFPA Style SM)
Small Male

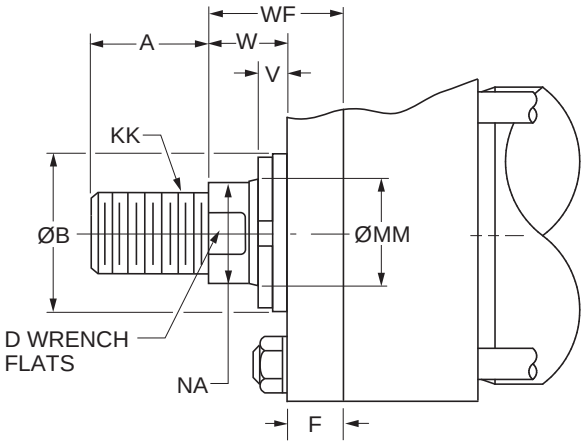

Thread Style 8 (NFPA Style IM)
Intermediate Male

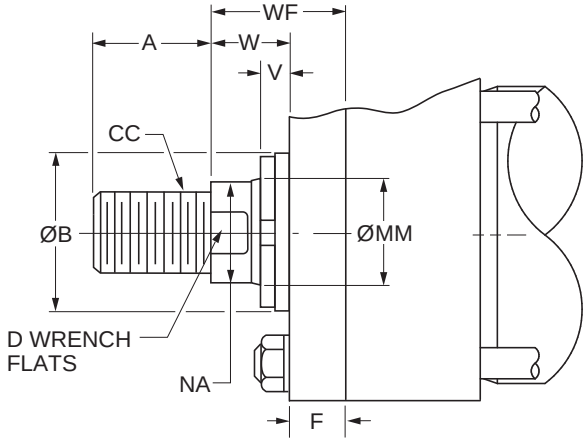

Rod End Dimensions

Bore Ø	Rod No.	MM Rod Ø	Thread		A	B Ø +.000 -.002	D	F	NA	V	W	WF
			Style 8 CC	Style 4 KK								
1.50	1 (Std.)	0.625	1/2-20	7/16-20	0.75	1.124	0.50	0.38	0.56	0.25	0.63	1.00
	2	1.000	7/8-14	3/4-16	1.13	1.499	0.88	0.38	0.94	0.50	1.00	1.38
2.00	1 (Std.)	1.000	7/8-14	3/4-16	1.13	1.499	0.88	0.63	0.94	0.25	0.75	1.38
	2	1.375	1 1/4-12	1-14	1.63	1.999	1.13	0.63	1.31	0.38	1.00	1.63
2.50	1 (Std.)	1.000	7/8-14	3/4-16	1.13	1.499	0.88	0.63	0.94	0.25	0.75	1.38
	2	1.750	1 1/2-12	1 1/4-12	2.00	2.374	1.50	0.63	1.69	0.50	1.25	1.88
	3	1.375	1 1/4-12	1-14	1.63	1.999	1.13	0.63	1.31	0.38	1.00	1.63
3.25	1 (Std.)	1.375	1 1/4-12	1-14	1.63	1.999	1.13	0.75	1.31	0.25	0.88	1.63
	2	2.000	1 3/4-12	1 1/2-12	2.25	2.624	1.69	0.75	1.94	0.38	1.25	2.00
	3	1.750	1 1/2-12	1 1/4-12	2.00	2.374	1.50	0.75	1.69	0.38	1.13	1.88
4.00	1 (Std.)	1.750	1 1/2-12	1 1/4-12	2.00	2.374	1.50	0.88	1.69	0.25	1.00	1.88
	2	2.500	2 1/4-12	1 7/8-12	3.00	3.124	2.06	0.88	2.38	0.38	1.38	2.25
	3	2.000	1 3/4-12	1 1/2-12	2.25	2.624	1.69	0.88	1.94	0.25	1.13	2.00
5.00	1 (Std.)	2.000	1 3/4-12	1 1/2-12	2.25	2.624	1.69	0.88	1.94	0.25	1.13	2.00
	2	3.500	3 1/4-12	2 1/2-12	3.50	4.249	3.00	0.88	3.38	0.38	1.38	2.25
	3	2.500	2 1/4-12	1 7/8-12	3.00	3.124	2.06	0.88	2.38	0.38	1.38	2.25
	4	3.000	2 3/4-12	2 1/4-12	3.50	3.749	2.63	0.88	2.88	0.38	1.38	2.25
6.00	1 (Std.)	2.500	2 1/4-12	1 7/8-12	3.00	3.124	2.06	1.00	2.38	0.25	1.25	2.25
	2	4.000	3 3/4-12	3-12	4.00	4.749	3.38	1.00	3.88	0.25	1.25	2.25
	3	3.000	2 3/4-12	2 1/4-12	3.50	3.749	2.63	1.00	2.88	0.25	1.25	2.25
	4	3.500	3 1/4-12	2 1/2-12	3.50	4.249	3.00	1.00	3.38	0.25	1.25	2.25

"Special" Thread Style 3

Special thread, extension, rod eye, blank, etc., are also available.

To order, specify "Style 3" and give desired dimensions for KK, A, W or WF.
If otherwise special, furnish dimensioned sketch.

⚠**PROP 65 WARNING** **WARNING:** This product can expose you to chemicals including **Lead and Lead Compounds** which are known to the State of California to cause cancer and birth defects or other reproductive harm. For more information go to www.P65Warnings.ca.gov

Rod End Dimensions

Thread Style 9[2]
(NFPA Style SF) Small Female

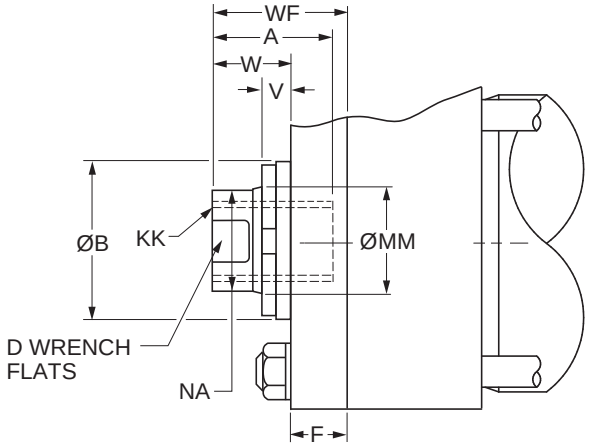

Style 55[1]
Flanged Rod End

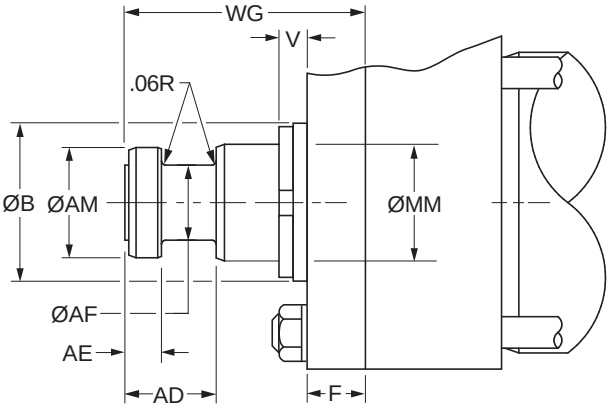

Rod End Dimensions

Bore Ø	Rod No.	MM Rod Ø	Thread Style 9 KK	A	AD	AE +.001 -.001	AF Ø	AM Ø	B Ø +.000 -.002	D	F	NA	V	W	WF	WG
1.50	1 (Std.)	0.625	7/16-20	0.75	0.63	0.249	0.38	0.57	1.124	0.50	0.38	0.56	0.25	0.63	1.00	1.75
	2	1.000	3/4-16	1.13	0.94	0.374	0.69	0.95	1.499	0.88	0.38	0.94	0.50	1.00	1.38	2.38
2.00	1 (Std.)	1.000	3/4-16	1.13	0.94	0.374	0.69	0.95	1.499	0.88	0.63	0.94	0.25	0.75	1.38	2.38
	2	1.375	1-14	1.63	1.06	0.374	0.88	1.32	1.999	1.13	0.63	1.31	0.38	1.00	1.63	2.75
2.50	1 (Std.)	1.000	3/4-16	1.13	0.94	0.374	0.69	0.95	1.499	0.88	0.63	0.94	0.25	0.75	1.38	2.38
	2	1.750	1 1/4-12	2.00	1.31	0.499	1.13	1.70	2.374	1.50	0.63	1.69	0.50	1.25	1.88	3.13
	3	1.375	1-14	1.63	1.06	0.374	0.88	1.32	1.999	1.13	0.63	1.31	0.38	1.00	1.63	2.75
3.25	1 (Std.)	1.375	1-14	1.63	1.06	0.374	0.88	1.32	1.999	1.13	0.75	1.31	0.25	0.88	1.63	2.75
	2	2.000	1 1/2-12	2.25	1.69	0.624	1.38	1.95	2.624	1.69	0.75	1.94	0.38	1.25	2.00	3.75
	3	1.750	1 1/4-12	2.00	1.31	0.499	1.13	1.70	2.374	1.50	0.75	1.69	0.38	1.13	1.88	3.13
4.00	1 (Std.)	1.750	1 1/4-12	2.00	1.31	0.499	1.13	1.70	2.374	1.50	0.88	1.69	0.25	1.00	1.88	3.13
	2	2.500	1 7/8-12	3.00	1.94	0.749	1.75	2.45	3.124	2.06	0.88	2.38	0.38	1.38	2.25	4.50
	3	2.000	1 1/2-12	2.25	1.69	0.624	1.38	1.95	2.624	1.69	0.88	1.94	0.25	1.13	2.00	3.75
5.00	1 (Std.)	2.000	1 1/2-12	2.25	1.69	0.624	1.38	1.95	2.624	1.69	0.88	1.94	0.25	1.13	2.00	3.75
	2	3.500	2 1/2-12	3.50	2.69	0.999	2.50	3.45	4.249	3.00	0.88	3.38	0.38	1.38	2.25	5.63
	3	2.500	1 7/8-12	3.00	1.94	0.749	1.75	2.45	3.124	2.06	0.88	2.38	0.38	1.38	2.25	4.50
	4	3.000	2 1/4-12	3.50	2.44	0.874	2.25	2.95	3.749	2.63	0.88	2.88	0.38	1.38	2.25	4.88
6.00	1 (Std.)	2.500	1 7/8-12	3.00	1.94	0.749	1.75	2.45	3.124	2.06	1.00	2.38	0.25	1.25	2.25	4.50
	2	4.000	3-12	4.00	2.69	0.999	3.00	3.95	4.749	3.38	1.00	3.88	0.25	1.25	2.25	5.75
	3	3.000	2 1/4-12	3.50	2.44	0.874	2.25	2.95	3.749	2.63	1.00	2.88	0.25	1.25	2.25	4.88
	4	3.500	2 1/2-12	3.50	2.69	0.999	2.50	3.45	4.249	3.00	1.00	3.38	0.25	1.25	2.25	5.63

"Special" Thread Style 3

Special thread, extension, rod eye, blank, etc., are also available.

To order, specify "Style 3" and give desired dimensions for KK, A, W or WF.
If otherwise special, furnish dimensioned sketch.

[1] For special WG dimension, specify "Style 3" and give desired dimension for WG. For other changes, place "S" in the model code, and describe rod end with dimensioned sketch.

[2] Style 9 stroke restrictions may apply. See Style 9 Minimum Stroke Table on How to Order page for details.

⚠PROP 65 WARNING **WARNING:** This product can expose you to chemicals including **Lead and Lead Compounds** which are known to the State of California to cause cancer and birth defects or other reproductive harm. For more information go to www.P65Warnings.ca.gov

Tie Rods Extended Both Ends Mounting
Style TD
(NFPA Style MX1)

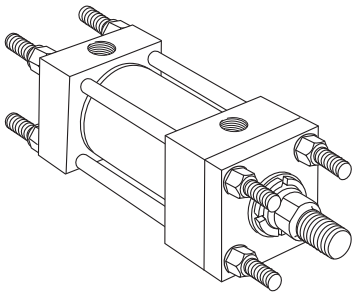

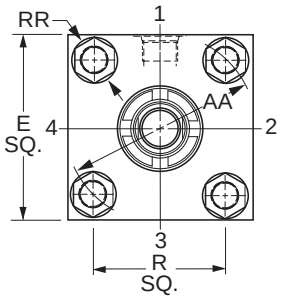

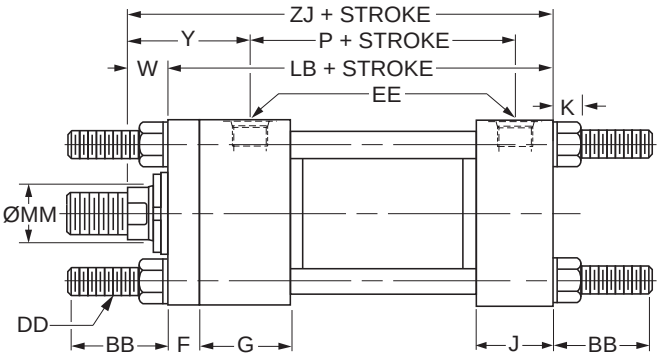

Style TD – Dimensional and Mounting Data

Bore Ø	Rod No.	MM Rod Ø	AA	BB	DD	E	EE		F	G	J	K Max.	R	RR	W	Y	Add Stroke		
							NPTF[1]	SAE[2]									LB	P	ZJ
1.50	1 (std.)	0.625	2.31	1.38	3/8-24	2.50	1/2	10	0.38	1.75	1.50	0.42	1.63	0.68	0.63	2.00	5.00	2.88	5.63
	2	1.000	2.31	1.38	3/8-24	2.50	1/2	10	0.38	1.75	1.50	0.42	1.63	0.68	1.00	2.38	5.00	2.88	6.00
2.00	1 (std.)	1.000	2.90	1.81	1/2-20	3.00	1/2	10	0.63	1.75	1.50	0.57	2.05	0.90	0.75	2.38	5.25	2.88	6.00
	2	1.375	2.90	1.81	1/2-20	3.00	1/2	10	0.63	1.75	1.50	0.57	2.05	0.90	1.00	2.63	5.25	2.88	6.25
2.50	1 (std.)	1.000	3.61	1.81	1/2-20	3.50	1/2	10	0.63	1.75	1.50	0.57	2.55	0.90	0.75	2.38	5.38	3.00	6.13
	2	1.750	3.61	1.81	1/2-20	3.50	1/2	10	0.63	1.75	1.50	0.57	2.55	0.90	1.25	2.88	5.38	3.00	6.63
	3	1.375	3.61	1.81	1/2-20	3.50	1/2	10	0.63	1.75	1.50	0.57	2.55	0.90	1.00	2.63	5.38	3.00	6.38
3.25	1 (std.)	1.375	4.60	2.31	5/8-18	4.50	3/4	12	0.75	2.00	1.75	0.68	3.25	1.11	0.88	2.75	6.25	3.50	7.13
	2	2.000	4.60	2.31	5/8-18	4.50	3/4	12	0.75	2.00	1.75	0.68	3.25	1.11	1.25	3.13	6.25	3.50	7.50
	3	1.750	4.60	2.31	5/8-18	4.50	3/4	12	0.75	2.00	1.75	0.68	3.25	1.11	1.13	3.00	6.25	3.50	7.38
4.00	1 (std.)	1.750	5.40	2.31	5/8-18	5.00	3/4	12	0.88	2.00	1.75	0.68	3.82	1.11	1.00	3.00	6.63	3.75	7.63
	2	2.500	5.40	2.31	5/8-18	5.00	3/4	12	0.88	2.00	1.75	0.68	3.82	1.11	1.38	3.38	6.63	3.75	8.00
	3	2.000	5.40	2.31	5/8-18	5.00	3/4	12	0.88	2.00	1.75	0.68	3.82	1.11	1.13	3.13	6.63	3.75	7.75
5.00	1 (std.)	2.000	7.00	3.19	7/8-14	6.50	3/4	12	0.88	2.00	1.75	0.94	4.95	1.55	1.13	3.13	7.13	4.25	8.25
	2	3.500	7.00	3.19	7/8-14	6.50	3/4	12	0.88	2.00	1.75	0.94	4.95	1.55	1.38	3.38	7.13	4.25	8.50
	3	2.500	7.00	3.19	7/8-14	6.50	3/4	12	0.88	2.00	1.75	0.94	4.95	1.55	1.38	3.38	7.13	4.25	8.50
	4	3.000	7.00	3.19	7/8-14	6.50	3/4	12	0.88	2.00	1.75	0.94	4.95	1.55	1.38	3.38	7.13	4.25	8.50
6.00	1 (std.)	2.500	8.10	3.63	1-14	7.50	1	16	1.00	2.25	2.25	1.05	5.73	1.77	1.25	3.50	8.38	4.88	9.63
	2	4.000	8.10	3.63	1-14	7.50	1	16	1.00	2.25	2.25	1.05	5.73	1.77	1.25	3.50	8.38	4.88	9.63
	3	3.000	8.10	3.63	1-14	7.50	1	16	1.00	2.25	2.25	1.05	5.73	1.77	1.25	3.50	8.38	4.88	9.63
	4	3.500	8.10	3.63	1-14	7.50	1	16	1.00	2.25	2.25	1.05	5.73	1.77	1.25	3.50	8.38	4.88	9.63

[1]NPTF ports are available at no extra charge.
[2]SAE straight thread ports are standard and are indicated by port number.

Style T

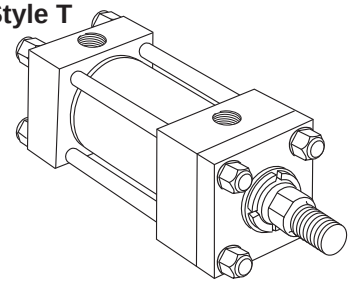

Style TB

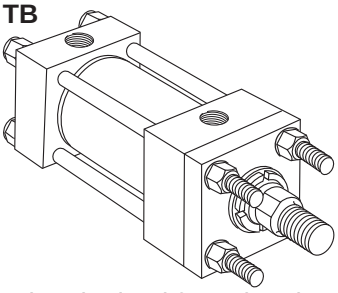

Style TC

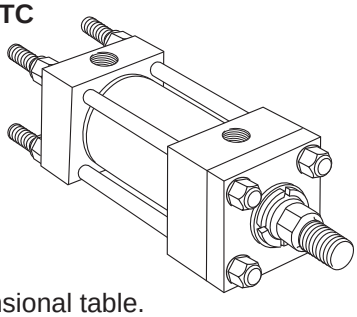

Dimensions for T, TB and TC Mount may be obtained from the above dimensional table.

⚠PROP 65 WARNING **WARNING:** This product can expose you to chemicals including **Lead and Lead Compounds** which are known to the State of California to cause cancer and birth defects or other reproductive harm. For more information go to www.P65Warnings.ca.gov

Head Rectangular Flange Mounting
Style J
(NFPA Style MF1)

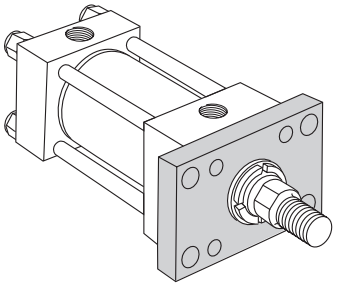

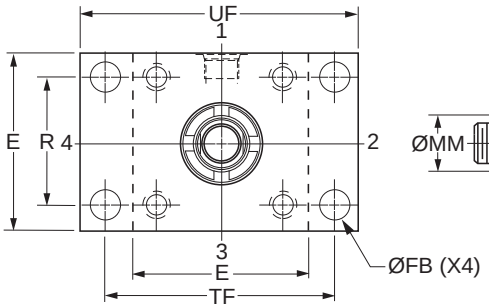

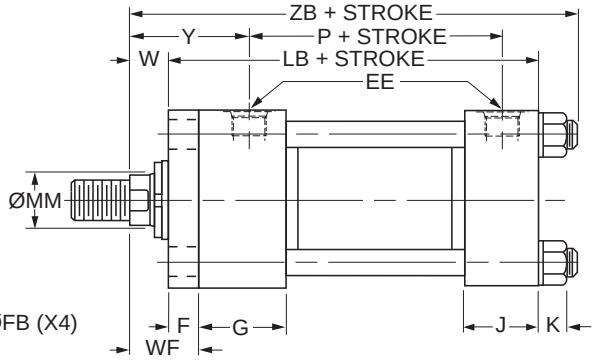

Style J – Dimensional and Mounting Data

Bore Ø	E	EE		F	FB Ø	G	J	K Max.	R	TF	UF	Add Stroke	
		NPTF[1]	SAE[2]									LB	P
1.50	2.50	1/2	10	0.38	0.44	1.75	1.50	0.42	1.63	3.44	4.25	5.00	2.88
2.00	3.00	1/2	10	0.63	0.56	1.75	1.50	0.57	2.05	4.13	5.13	5.25	2.88
2.50	3.50	1/2	10	0.63	0.56	1.75	1.50	0.57	2.55	4.63	5.63	5.38	3.00
3.25	4.50	3/4	12	0.75	0.69	2.00	1.75	0.68	3.25	5.88	7.13	6.25	3.50
4.00	5.00	3/4	12	0.88	0.69	2.00	1.75	0.68	3.82	6.38	7.63	6.63	3.75
5.00	6.50	3/4	12	0.88	0.94	2.00	1.75	0.94	4.95	8.19	9.75	7.13	4.25
6.00	7.50	1	16	1.00	1.06	2.25	2.25	1.05	5.73	9.44	11.25	8.38	4.88

[1]NPTF ports are available at no extra charge.
[2]SAE straight thread ports are standard and are indicated by port number.

Style J – Dimensional and Mounting Data

Bore Ø	Rod No.	MM Rod Ø	W	WF	Y	Add Stroke
						ZB Max.
1.50	1 (std.)	0.625	0.63	1.00	2.00	6.29
	2	1.000	1.00	1.38	2.38	6.67
2.00	1 (std.)	1.000	0.75	1.38	2.38	6.81
	2	1.375	1.00	1.63	2.63	7.06
2.50	1 (std.)	1.000	0.75	1.38	2.38	6.93
	2	1.750	1.25	1.88	2.88	7.43
	3	1.375	1.00	1.63	2.63	7.18
3.25	1 (std.)	1.375	0.88	1.63	2.75	8.06
	2	2.000	1.25	2.00	3.13	8.43
	3	1.750	1.13	1.88	3.00	8.31
4.00	1 (std.)	1.750	1.00	1.88	3.00	8.56
	2	2.500	1.38	2.25	3.38	8.94
	3	2.000	1.13	2.00	3.13	8.68
5.00	1 (std.)	2.000	1.13	2.00	3.13	9.44
	2	3.500	1.38	2.25	3.38	9.69
	3	2.500	1.38	2.25	3.38	9.69
	4	3.000	1.38	2.25	3.38	9.69
6.00	1 (std.)	2.500	1.25	2.25	3.50	10.93
	2	4.000	1.25	2.25	3.50	10.93
	3	3.000	1.25	2.25	3.50	10.93
	4	3.500	1.25	2.25	3.50	10.93

Style J – Maximum Operating Pressure / 2H

Bore Ø	Maximum psi Push[3]			
	Rod Code			
	1	2	3	4
1.50	1500	1000	-	-
2.00	2000	1200	-	-
2.50	2000	1100	1500	-
3.25	1800	1300	1400	-
4.00	1800	1300	1700	-
5.00	1300	800	1200	1000
6.00	1200	800	1000	900

[3]Maximum Pressure Rating – Push Application.

⚠**PROP 65 WARNING** **WARNING:** This product can expose you to chemicals including **Lead and Lead Compounds** which are known to the State of California to cause cancer and birth defects or other reproductive harm. For more information go to www.P65Warnings.ca.gov

Head Square Flange Mounting
Style JB
(NFPA Style MF5)

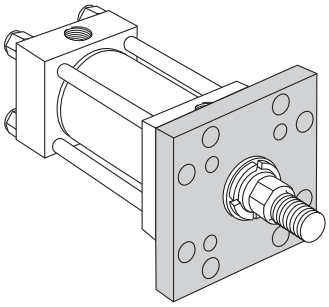

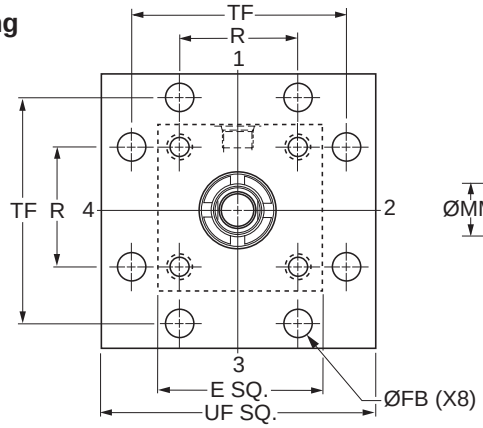

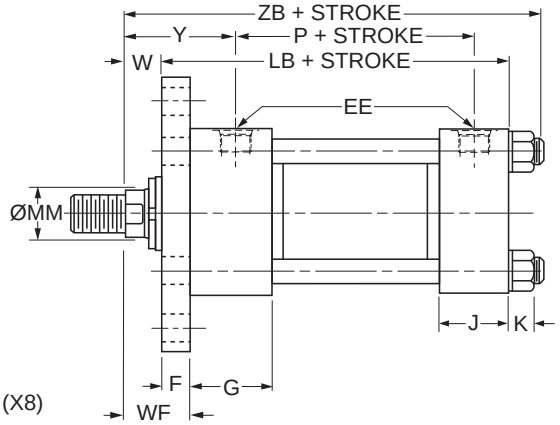

Style JB – Dimensional and Mounting Data

Bore Ø	E	EE		F	FB Ø	G	J	K Max.	R	TF	UF	Add Stroke	
		NPTF[1]	SAE[2]									LB	P
1.50	2.50	1/2	10	0.38	0.44	1.75	1.50	0.42	1.63	3.44	4.25	5.00	2.88
2.00	3.00	1/2	10	0.63	0.56	1.75	1.50	0.57	2.05	4.13	5.13	5.25	2.88
2.50	3.50	1/2	10	0.63	0.56	1.75	1.50	0.57	2.55	4.63	5.63	5.38	3.00
3.25	4.50	3/4	12	0.75	0.69	2.00	1.75	0.68	3.25	5.88	7.13	6.25	3.50
4.00	5.00	3/4	12	0.88	0.69	2.00	1.75	0.68	3.82	6.38	7.63	6.63	3.75
5.00	6.50	3/4	12	0.88	0.94	2.00	1.75	0.94	4.95	8.19	9.75	7.13	4.25
6.00	7.50	1	16	1.00	1.06	2.25	2.25	1.05	5.73	9.44	11.25	8.38	4.88

[1]NPTF ports are available at no extra charge.
[2]SAE straight thread ports are standard and are indicated by port number.

Style JB – Dimensional and Mounting Data

Bore Ø	Rod No.	MM Rod Ø	W	WF	Y	Add Stroke
						ZB Max.
1.50	1 (std.)	0.625	0.63	1.00	2.00	6.29
	2	1.000	1.00	1.38	2.38	6.67
2.00	1 (std.)	1.000	0.75	1.38	2.38	6.81
	2	1.375	1.00	1.63	2.63	7.06
2.50	1 (std.)	1.000	0.75	1.38	2.38	6.93
	2	1.750	1.25	1.88	2.88	7.43
	3	1.375	1.00	1.63	2.63	7.18
3.25	1 (std.)	1.375	0.88	1.63	2.75	8.06
	2	2.000	1.25	2.00	3.13	8.43
	3	1.750	1.13	1.88	3.00	8.31
4.00	1 (std.)	1.750	1.00	1.88	3.00	8.56
	2	2.500	1.38	2.25	3.38	8.94
	3	2.000	1.13	2.00	3.13	8.68
5.00	1 (std.)	2.000	1.13	2.00	3.13	9.44
	2	3.500	1.38	2.25	3.38	9.69
	3	2.500	1.38	2.25	3.38	9.69
	4	3.000	1.38	2.25	3.38	9.69
6.00	1 (std.)	2.500	1.25	2.25	3.50	10.93
	2	4.000	1.25	2.25	3.50	10.93
	3	3.000	1.25	2.25	3.50	10.93
	4	3.500	1.25	2.25	3.50	10.93

Style JB – Maximum Operating Pressure / 2H

Bore Ø	Maximum psi Push[3]			
	Rod Code			
	1	2	3	4
1.50	3000	3000	-	-
2.00	3000	3000	-	-
2.50	3000	3000	3000	-
3.25	3000	3000	3000	-
4.00	3000	3000	3000	-
5.00	3000	3000	3000	3000
6.00	3000	2700	3000	2700

[3]Maximum Pressure Rating – Push Application.

⚠**PROP 65 WARNING** **WARNING:** This product can expose you to chemicals including **Lead and Lead Compounds** which are known to the State of California to cause cancer and birth defects or other reproductive harm. For more information go to www.P65Warnings.ca.gov

Head Rectangular Mounting
Style JJ
(NFPA Style ME5)

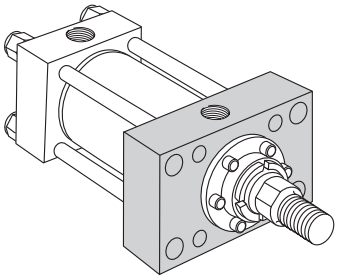

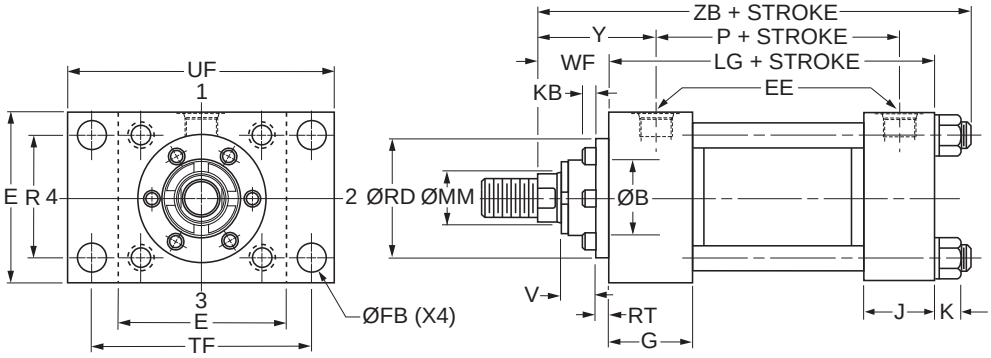

Style JJ – Dimensional and Mounting Data

Bore Ø	E	EE		FB Ø	G	J	K Max.	R	TF	UF	Add Stroke	
		NPTF[1]	SAE[2]								LG	P
1.50	2.50	1/2	10	0.44	1.75	1.50	0.42	1.63	3.44	4.25	4.63	2.88
2.00	3.00	1/2	10	0.56	1.75	1.50	0.57	2.05	4.13	5.13	4.63	2.88
2.50	3.50	1/2	10	0.56	1.75	1.50	0.57	2.55	4.63	5.63	4.75	3.00
3.25	4.50	3/4	12	0.69	2.00	1.75	0.68	3.25	5.88	7.13	5.50	3.50
4.00	5.00	3/4	12	0.69	2.00	1.75	0.68	3.82	6.38	7.63	5.75	3.75
5.00	6.50	3/4	12	0.94	2.00	1.75	0.94	4.95	8.19	9.75	6.25	4.25
6.00	7.50	1	16	1.06	2.25	2.25	1.05	5.73	9.44	11.25	7.38	4.88

[1]NPTF ports are available at no extra charge.
[2]SAE straight thread ports are standard and are indicated by port number.

Style JJ – Dimensional and Mounting Data

Bore Ø	Rod No.	MM Rod Ø	B Ø +.000 -.002	KB	RD Ø	RT	V	WF	Y	Add Stroke
										ZB Max
1.50	1 (std.)	0.625	1.124	0	1.94	0.38	0.25	1.00	2.00	6.29
	2	1.000	1.499	0	2.38	0.38	0.50	1.38	2.38	6.67
2.00	1 (std.)	1.000	1.499	0	2.38	0.38	0.50	1.38	2.38	6.81
	2	1.375	1.999	0.19	2.87	0.36	0.63	1.63	2.63	7.06
2.50	1 (std.)	1.000	1.499	0	2.38	0.38	0.50	1.38	2.38	6.93
	2	1.750	2.374	0.19	3.47	0.38	0.75	1.88	2.88	7.43
	3	1.375	1.999	0.19	2.87	0.36	0.63	1.63	2.63	7.18
3.25	1 (std.)	1.375	1.999	0.19	2.87	0.36	0.63	1.63	2.75	8.06
	2	2.000	2.624	0.13	3.72	0.63	0.50	2.00	3.13	8.43
	3	1.750	2.374	0.19	3.47	0.38	0.75	1.88	3.00	8.31
4.00	1 (std.)	1.750	2.374	0.19	3.47	0.38	0.75	1.88	3.00	8.56
	2	2.500	3.124	0.25	4.25	0.60	0.63	2.25	3.38	8.94
	3	2.000	2.624	0.13	3.72	0.63	0.50	2.00	3.13	8.68
5.00	1 (std.)	2.000	2.624	0.13	3.72	0.63	0.50	2.00	3.13	9.44
	2	3.500	4.249	0.25	5.76	0.63	0.63	2.25	3.38	9.69
	3	2.500	3.124	0.25	4.25	0.60	0.63	2.25	3.38	9.69
	4	3.000	3.749	0.22	5.26	0.63	0.63	2.25	3.38	9.69
6.00	1 (std.)	2.500	3.124	0.25	4.25	0.60	0.63	2.25	3.50	10.93
	2	4.000	4.749	0.16	6.31	0.75	0.50	2.25	3.50	10.93
	3	3.000	3.749	0.22	5.26	0.63	0.63	2.25	3.50	10.93
	4	3.500	4.249	0.25	5.76	0.63	0.63	2.25	3.50	10.93

⚠**PROP 65 WARNING** **WARNING:** This product can expose you to chemicals including **Lead and Lead Compounds** which are known to the State of California to cause cancer and birth defects or other reproductive harm. For more information go to www.P65Warnings.ca.gov

Cap Rectangular Flange Mounting

Style H
(NFPA Style MF2)

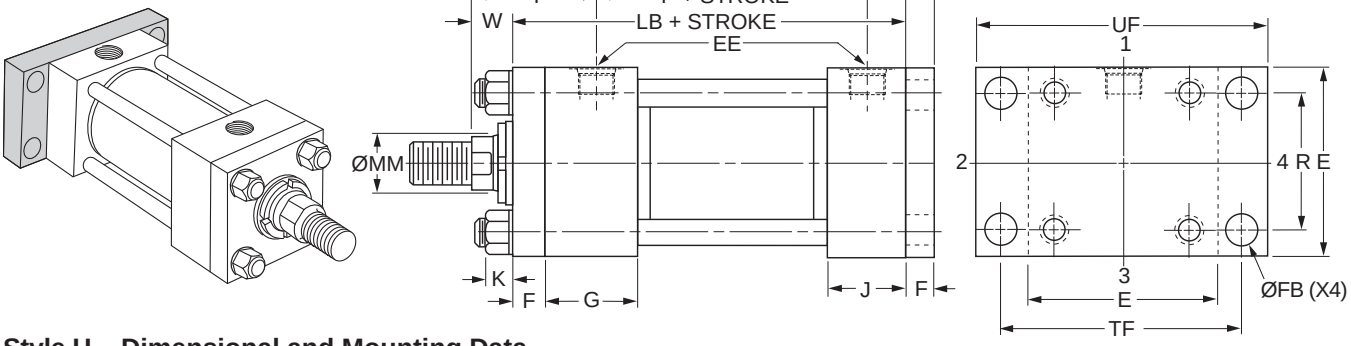

Style H – Dimensional and Mounting Data

Bore Ø	E	EE		F	FB Ø	G	J	K Max.	R	TF	UF	Add Stroke	
		NPTF[1]	SAE[2]									LB	P
1.50	2.50	1/2	10	0.38	0.44	1.75	1.50	0.42	1.63	3.44	4.25	5.00	2.88
2.00	3.00	1/2	10	0.63	0.56	1.75	1.50	0.57	2.05	4.13	5.13	5.25	2.88
2.50	3.50	1/2	10	0.63	0.56	1.75	1.50	0.57	2.55	4.63	5.63	5.38	3.00
3.25	4.50	3/4	12	0.75	0.69	2.00	1.75	0.68	3.25	5.88	7.13	6.25	3.50
4.00	5.00	3/4	12	0.88	0.69	2.00	1.75	0.68	3.82	6.38	7.63	6.63	3.75
5.00	6.50	3/4	12	0.88	0.94	2.00	1.75	0.94	4.95	8.19	9.75	7.13	4.25
6.00	7.50	1	16	1.00	1.06	2.25	2.25	1.05	5.73	9.44	11.25	8.38	4.88

[1]NPTF ports are available at no extra charge.
[2]SAE straight thread ports are standard and are indicated by port number.

Style H – Dimensional and Mounting Data

Bore Ø	Rod No.	MM Rod Ø	W	Y	Add Stroke	
					XF	ZF
1.50	1 (std.)	0.625	0.63	2.00	5.63	6.00
	2	1.000	1.00	2.38	6.00	6.38
2.00	1 (std.)	1.000	0.75	2.38	6.00	6.63
	2	1.375	1.00	2.63	6.25	6.88
2.50	1 (std.)	1.000	0.75	2.38	6.13	6.75
	2	1.750	1.25	2.88	6.63	7.25
	3	1.375	1.00	2.63	6.38	7.00
3.25	1 (std.)	1.375	0.88	2.75	7.13	7.88
	2	2.000	1.25	3.13	7.50	8.25
	3	1.750	1.13	3.00	7.38	8.13
4.00	1 (std.)	1.750	1.00	3.00	7.63	8.50
	2	2.500	1.38	3.38	8.00	8.88
	3	2.000	1.13	3.13	7.75	8.63
5.00	1 (std.)	2.000	1.13	3.13	8.25	9.13
	2	3.500	1.38	3.38	8.50	9.38
	3	2.500	1.38	3.38	8.50	9.38
	4	3.000	1.38	3.38	8.50	9.38
6.00	1 (std.)	2.500	1.25	3.50	9.63	10.63
	2	4.000	1.25	3.50	9.63	10.63
	3	3.000	1.25	3.50	9.63	10.63
	4	3.500	1.25	3.50	9.63	10.63

Style H – Maximum Operating Pressure / 2H

Bore Ø	Maximum psi Pull[3]			
	Rod Code			
	1	2	3	4
1.50	2500	3000	-	-
2.00	3000	3000	-	-
2.50	3000	3000	3000	-
3.25	3000	3000	3000	-
4.00	3000	3000	3000	-
5.00	2000	3000	2000	2500
6.00	1800	2500	2000	2000

[3] Maximum pressure rating — pull application.

⚠**PROP 65 WARNING** **WARNING:** This product can expose you to chemicals including **Lead and Lead Compounds** which are known to the State of California to cause cancer and birth defects or other reproductive harm. For more information go to www.P65Warnings.ca.gov

Cap Square Flange Mounting
Style HB
(NFPA Style MF6)

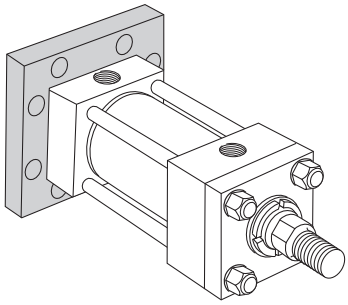

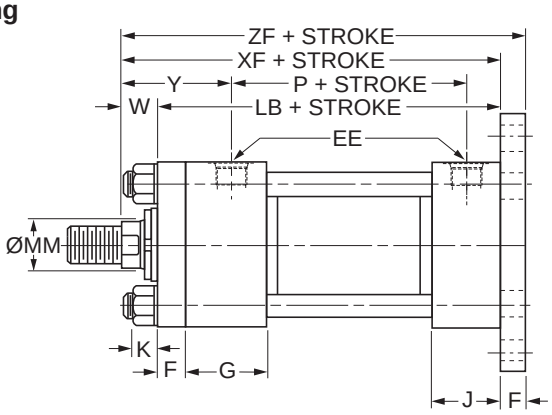

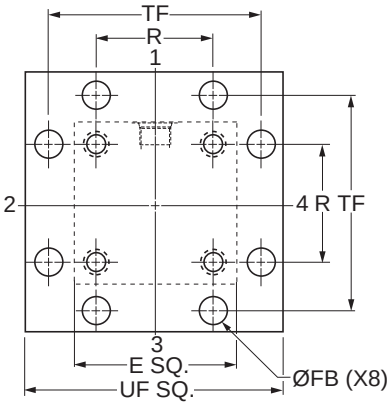

Style HB – Dimensional and Mounting Data

Bore Ø	E	EE		F	FB Ø	G	J	K Max.	R	TF	UF	Add Stroke	
		NPTF[1]	SAE[2]									LB	P
1.50	2.50	1/2	10	0.38	0.44	1.75	1.50	0.42	1.63	3.44	4.25	5.00	2.88
2.00	3.00	1/2	10	0.63	0.56	1.75	1.50	0.57	2.05	4.13	5.13	5.25	2.88
2.50	3.50	1/2	10	0.63	0.56	1.75	1.50	0.57	2.55	4.63	5.63	5.38	3.00
3.25	4.50	3/4	12	0.75	0.69	2.00	1.75	0.68	3.25	5.88	7.13	6.25	3.50
4.00	5.00	3/4	12	0.88	0.69	2.00	1.75	0.68	3.82	6.38	7.63	6.63	3.75
5.00	6.50	3/4	12	0.88	0.94	2.00	1.75	0.94	4.95	8.19	9.75	7.13	4.25
6.00	7.50	1	16	1.00	1.06	2.25	2.25	1.05	5.73	9.44	11.25	8.38	4.88

[1]NPTF ports are available at no extra charge.
[2]SAE straight thread ports are standard and are indicated by port number.

Style HB – Dimensional and Mounting Data

Bore Ø	Rod No.	MM Rod Ø	W	Y	Add Stroke	
					XF	ZF
1.50	1 (std.)	0.625	0.63	2.00	5.63	6.00
	2	1.000	1.00	2.38	6.00	6.38
2.00	1 (std.)	1.000	0.75	2.38	6.00	6.63
	2	1.375	1.00	2.63	6.25	6.88
2.50	1 (std.)	1.000	0.75	2.38	6.13	6.75
	2	1.750	1.25	2.88	6.63	7.25
	3	1.375	1.00	2.63	6.38	7.00
3.25	1 (std.)	1.375	0.88	2.75	7.13	7.88
	2	2.000	1.25	3.13	7.50	8.25
	3	1.750	1.13	3.00	7.38	8.13
4.00	1 (std.)	1.750	1.00	3.00	7.63	8.50
	2	2.500	1.38	3.38	8.00	8.88
	3	2.000	1.13	3.13	7.75	8.63
5.00	1 (std.)	2.000	1.13	3.13	8.25	9.13
	2	3.500	1.38	3.38	8.50	9.38
	3	2.500	1.38	3.38	8.50	9.38
	4	3.000	1.38	3.38	8.50	9.38
6.00	1 (std.)	2.500	1.25	3.50	9.63	10.63
	2	4.000	1.25	3.50	9.63	10.63
	3	3.000	1.25	3.50	9.63	10.63
	4	3.500	1.25	3.50	9.63	10.63

⚠**PROP 65 WARNING** **WARNING:** This product can expose you to chemicals including **Lead and Lead Compounds** which are known to the State of California to cause cancer and birth defects or other reproductive harm. For more information go to www.P65Warnings.ca.gov

Cap Rectangular Flange Mounting
Style HH
(NFPA Style ME6)

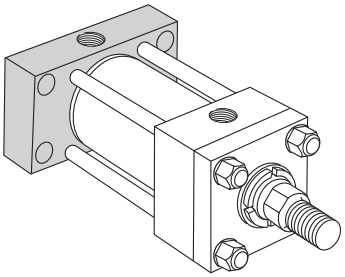

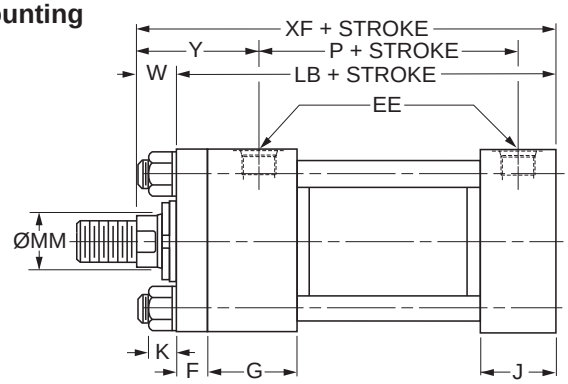

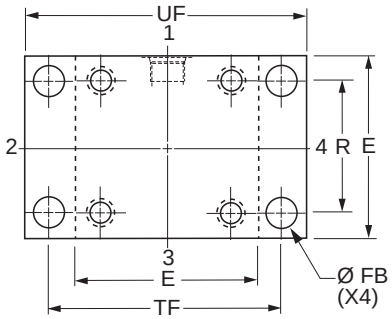

Style HH – Dimensional and Mounting Data

Bore Ø	E	EE		F	FB Ø	G	J	K Max.	R	TF	UF	Add Stroke	
		NPTF[1]	SAE[2]									LB	P
1.50	2.50	1/2	10	0.38	0.44	1.75	1.50	0.42	1.63	3.44	4.25	5.00	2.88
2.00	3.00	1/2	10	0.63	0.56	1.75	1.50	0.57	2.05	4.13	5.13	5.25	2.88
2.50	3.50	1/2	10	0.63	0.56	1.75	1.50	0.57	2.55	4.63	5.63	5.38	3.00
3.25	4.50	3/4	12	0.75	0.69	2.00	1.75	0.68	3.25	5.88	7.13	6.25	3.50
4.00	5.00	3/4	12	0.88	0.69	2.00	1.75	0.68	3.82	6.38	7.63	6.63	3.75
5.00	6.50	3/4	12	0.88	0.94	2.00	1.75	0.94	4.95	8.19	9.75	7.13	4.25
6.00	7.50	1	16	1.00	1.06	2.25	2.25	1.05	5.73	9.44	11.25	8.38	4.88

[1]NPTF ports are available at no extra charge.
[2]SAE straight thread ports are standard and are indicated by port number.

Style HH – Dimensional and Mounting Data

Bore Ø	Rod No.	MM Rod Ø	W	Y	Add Stroke
					XF
1.50	1 (std.)	0.625	0.63	2.00	5.63
	2	1.000	1.00	2.38	6.00
2.00	1 (std.)	1.000	0.75	2.38	6.00
	2	1.375	1.00	2.63	6.25
2.50	1 (std.)	1.000	0.75	2.38	6.13
	2	1.750	1.25	2.88	6.63
	3	1.375	1.00	2.63	6.38
3.25	1 (std.)	1.375	0.88	2.75	7.13
	2	2.000	1.25	3.13	7.50
	3	1.750	1.13	3.00	7.38
4.00	1 (std.)	1.750	1.00	3.00	7.63
	2	2.500	1.38	3.38	8.00
	3	2.000	1.13	3.13	7.75
5.00	1 (std.)	2.000	1.13	3.13	8.25
	2	3.500	1.38	3.38	8.50
	3	2.500	1.38	3.38	8.50
	4	3.000	1.38	3.38	8.50
6.00	1 (std.)	2.500	1.25	3.50	9.63
	2	4.000	1.25	3.50	9.63
	3	3.000	1.25	3.50	9.63
	4	3.500	1.25	3.50	9.63

⚠**PROP 65 WARNING** **WARNING:** This product can expose you to chemicals including **Lead and Lead Compounds** which are known to the State of California to cause cancer and birth defects or other reproductive harm. For more information go to www.P65Warnings.ca.gov

Side Lug Mounting
Style C
(NFPA Style MS2)

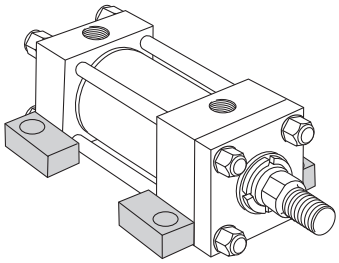

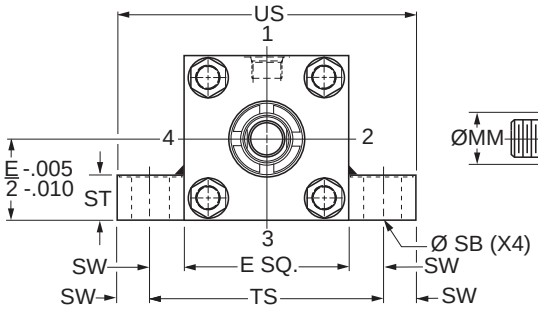

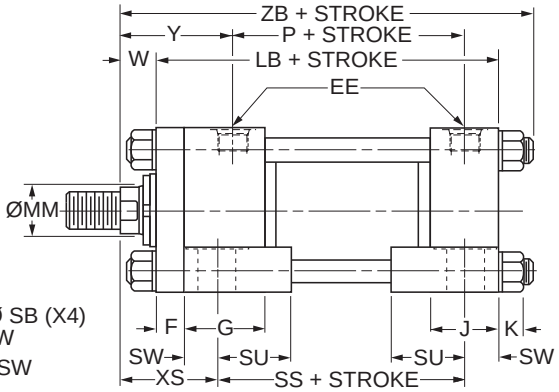

Style C – Dimensional and Mounting Data

Bore Ø	E	EE		F	G	J	K Max.	SB[3] Ø	ST	SU	SW	TS	US	Add Stroke		
		NPTF[1]	SAE[2]											LB	P	SS
1.50	2.50	1/2	10	0.38	1.75	1.50	0.42	0.44	0.50	0.94	0.38	3.25	4.00	5.00	2.88	3.88
2.00	3.00	1/2	10	0.63	1.75	1.50	0.57	0.56	0.75	1.25	0.50	4.00	5.00	5.25	2.88	3.63
2.50	3.50	1/2	10	0.63	1.75	1.50	0.57	0.81	1.00	1.56	0.69	4.88	6.25	5.38	3.00	3.38
3.25	4.50	3/4	12	0.75	2.00	1.75	0.68	0.81	1.00	1.56	0.69	5.88	7.25	6.25	3.50	4.13
4.00	5.00	3/4	12	0.88	2.00	1.75	0.68	1.06	1.25	2.00	0.88	6.75	8.50	6.63	3.75	4.00
5.00	6.50	3/4	12	0.88	2.00	1.75	0.94	1.06	1.25	2.00	0.88	8.25	10.00	7.13	4.25	4.50
6.00	7.50	1	16	1.00	2.25	2.25	1.05	1.31	1.50	2.50	1.13	9.75	12.00	8.38	4.88	5.13

[1]NPTF ports are available at no extra charge.
[2]SAE straight thread ports are standard and are indicated by port number.
[3]Upper surface spot faced for socket head screws.

Style C – Dimensional and Mounting Data

Bore Ø	Rod No.	MM Rod Ø	W	XS	Y	Add Stroke
						ZB Max.
1.50	1 (std.)	0.625	0.63	1.38	2.00	6.29
	2	1.000	1.00	1.75	2.38	6.67
2.00	1 (std.)	1.000	0.75	1.88	2.38	6.81
	2	1.375	1.00	2.13	2.63	7.06
2.50	1 (std.)	1.000	0.75	2.06	2.38	6.93
	2	1.750	1.25	2.56	2.88	7.43
	3	1.375	1.00	2.31	2.63	7.18
3.25	1 (std.)	1.375	0.88	2.31	2.75	8.06
	2	2.000	1.25	2.69	3.13	8.43
	3	1.750	1.13	2.56	3.00	8.31
4.00	1 (std.)	1.750	1.00	2.75	3.00	8.56
	2	2.500	1.38	3.13	3.38	8.94
	3	2.000	1.13	2.88	3.13	8.68
5.00	1 (std.)	2.000	1.13	2.88	3.13	9.44
	2	3.500	1.38	3.13	3.38	9.69
	3	2.500	1.38	3.13	3.38	9.69
	4	3.000	1.38	3.13	3.38	9.69
6.00	1 (std.)	2.500	1.25	3.38	3.50	10.93
	2	4.000	1.25	3.38	3.50	10.93
	3	3.000	1.25	3.38	3.50	10.93
	4	3.500	1.25	3.38	3.50	10.93

⚠**PROP 65 WARNING** **WARNING:** This product can expose you to chemicals including **Lead and Lead Compounds** which are known to the State of California to cause cancer and birth defects or other reproductive harm. For more information go to www.P65Warnings.ca.gov

Side Tapped Mounting
Style F
(NFPA Style MS4)

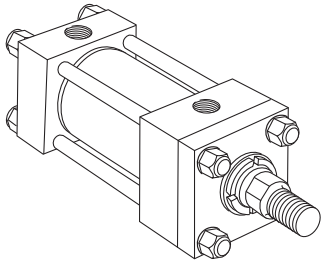

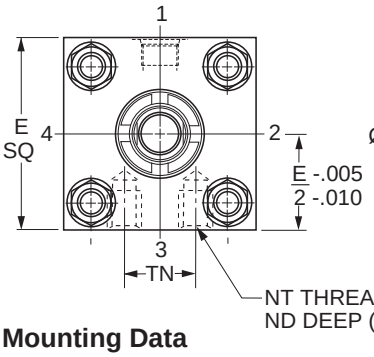

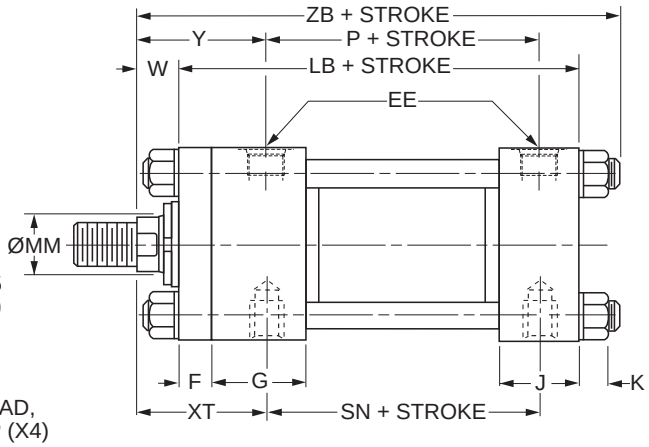

Style F – Dimensional and Mounting Data

Bore Ø	E	EE		F	G	J	K Max.	ND	NT	TN	Add Stroke		
		NPTF[1]	SAE[2]								LB	P	SN
1.50	2.50	1/2	10	0.38	1.75	1.50	0.42	0.38	3/8-16	0.75	5.00	2.88	2.88
2.00	3.00	1/2	10	0.63	1.75	1.50	0.57	0.44	1/2-13	0.94	5.25	2.88	2.88
2.50	3.50	1/2	10	0.63	1.75	1.50	0.57	0.50	5/8-11	1.31	5.38	3.00	3.00
3.25	4.50	3/4	12	0.75	2.00	1.75	0.68	0.69	3/4-10	1.50	6.25	3.50	3.50
4.00	5.00	3/4	12	0.88	2.00	1.75	0.68	0.69	1-8	2.06	6.63	3.75	3.75
5.00	6.50	3/4	12	0.88	2.00	1.75	0.94	1.00	1-8	2.94	7.13	4.25	4.25
6.00	7.50	1	16	1.00	2.25	2.25	1.05	1.25	1 1/4 -7	3.31	8.38	4.88	5.13

[1]NPTF ports are available at no extra charge.
[2]SAE straight thread ports are standard and are indicated by port number.

Style F – Dimensional and Mounting Data

Bore Ø	Rod No.	MM Rod Ø	W	XT	Y	Add Stroke
						ZB Max.
1.50	1 (std.)	0.625	0.63	2.00	2.00	6.29
	2	1.000	1.00	2.38	2.38	6.67
2.00	1 (std.)	1.000	0.75	2.38	2.38	6.81
	2	1.375	1.00	2.63	2.63	7.06
2.50	1 (std.)	1.000	0.75	2.38	2.38	6.93
	2	1.750	1.25	2.88	2.88	7.43
	3	1.375	1.00	2.63	2.63	7.18
3.25	1 (std.)	1.375	0.88	2.75	2.75	8.06
	2	2.000	1.25	3.13	3.13	8.43
	3	1.750	1.13	3.00	3.00	8.31
4.00	1 (std.)	1.750	1.00	3.00	3.00	8.56
	2	2.500	1.38	3.38	3.38	8.94
	3	2.000	1.13	3.13	3.13	8.68
5.00	1 (std.)	2.000	1.13	3.13	3.13	9.44
	2	3.500	1.38	3.38	3.38	9.69
	3	2.500	1.38	3.38	3.38	9.69
	4	3.000	1.38	3.38	3.38	9.69
6.00	1 (std.)	2.500	1.25	3.50	3.50	10.93
	2	4.000	1.25	3.50	3.50	10.93
	3	3.000	1.25	3.50	3.50	10.93
	4	3.500	1.25	3.50	3.50	10.93

⚠**PROP 65 WARNING** **WARNING:** This product can expose you to chemicals including **Lead and Lead Compounds** which are known to the State of California to cause cancer and birth defects or other reproductive harm. For more information go to www.P65Warnings.ca.gov

Cap Fixed Clevis Mounting
Style BB
(NFPA Style MP1)

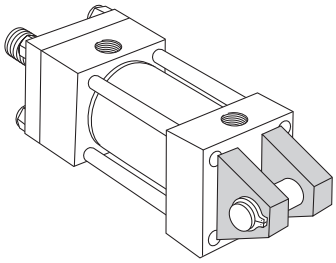

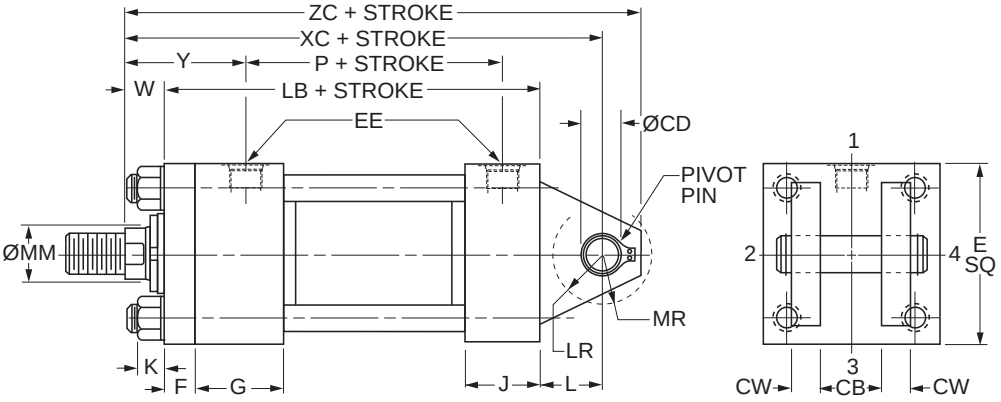

Style BB – Dimensional and Mounting Data

Bore Ø	E	EE		CB	CD[3] Ø +.000 -.002	CW	F	G	J	K Max.	L	LR	MR	Add Stroke	
		NPTF[1]	SAE[2]											LB	P
1.50	2.50	1/2	10	0.75	.501	0.50	0.38	1.75	1.50	0.42	0.75	0.56	0.63	5.00	2.88
2.00	3.00	1/2	10	1.25	.751	0.63	0.63	1.75	1.50	0.57	1.25	1.00	0.94	5.25	2.88
2.50	3.50	1/2	10	1.25	.751	0.63	0.63	1.75	1.50	0.57	1.25	0.94	0.94	5.38	3.00
3.25	4.50	3/4	12	1.50	1.001	0.75	0.75	2.00	1.75	0.68	1.50	1.25	1.19	6.25	3.50
4.00	5.00	3/4	12	2.00	1.376	1.00	0.88	2.00	1.75	0.68	2.13	1.75	1.63	6.63	3.75
5.00	6.50	3/4	12	2.50	1.751	1.25	0.88	2.00	1.75	0.94	2.25	2.06	2.13	7.13	4.25
6.00	7.50	1	16	2.50	2.001	1.25	1.00	2.25	2.25	1.05	2.50	2.31	2.38	8.38	4.88

[1]NPTF ports are available at no extra charge.
[2]SAE straight thread ports are standard and are indicated by port number.
[3]Diameter CD is Pin Diameter.

Style BB – Dimensional and Mounting Data

Bore Ø	Rod No.	MM Rod Ø	W	Y	Add Stroke	
					XC	ZC
1.50	1 (std.)	0.625	0.63	2.00	6.38	6.88
	2	1.000	1.00	2.38	6.75	7.25
2.00	1 (std.)	1.000	0.75	2.38	7.25	8.00
	2	1.375	1.00	2.63	7.50	8.25
2.50	1 (std.)	1.000	0.75	2.38	7.38	8.13
	2	1.750	1.25	2.88	7.88	8.63
	3	1.375	1.00	2.63	7.63	8.38
3.25	1 (std.)	1.375	0.88	2.75	8.63	9.63
	2	2.000	1.25	3.13	9.00	10.00
	3	1.750	1.13	3.00	8.88	9.88
4.00	1 (std.)	1.750	1.00	3.00	9.75	11.13
	2	2.500	1.38	3.38	10.13	11.50
	3	2.000	1.13	3.13	9.88	11.25
5.00	1 (std.)	2.000	1.13	3.13	10.50	12.25
	2	3.500	1.38	3.38	10.75	12.50
	3	2.500	1.38	3.38	10.75	12.50
	4	3.000	1.38	3.38	10.75	12.50
6.00	1 (std.)	2.500	1.25	3.50	12.13	14.13
	2	4.000	1.25	3.50	12.13	14.13
	3	3.000	1.25	3.50	12.13	14.13
	4	3.500	1.25	3.50	12.13	14.13

⚠**PROP 65 WARNING** **WARNING:** This product can expose you to chemicals including **Lead and Lead Compounds** which are known to the State of California to cause cancer and birth defects or other reproductive harm. For more information go to www.P65Warnings.ca.gov

Head Trunnion Mounting
Style D
(NFPA Style MT1)

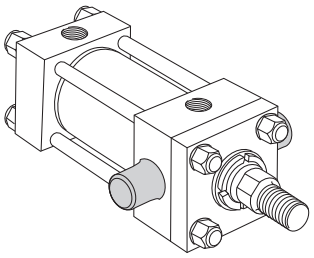

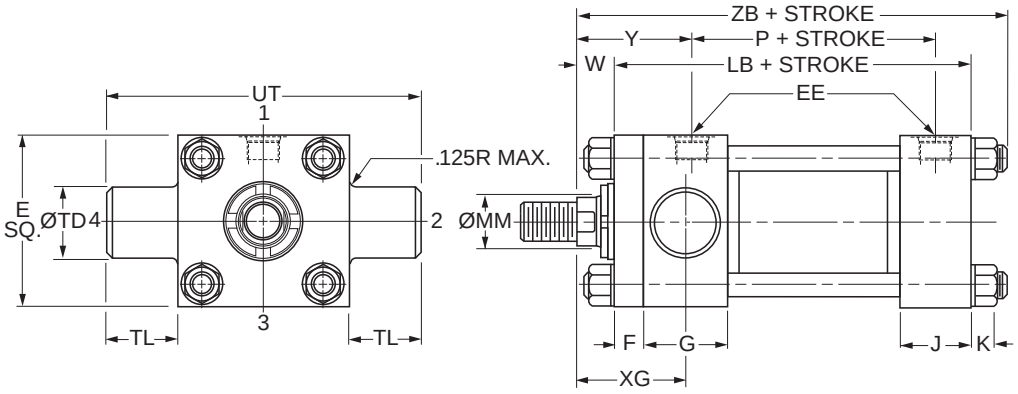

Style D – Dimensional and Mounting Data

Bore Ø	E	EE		F	G	J	K Max.	TD Ø +.000 -.001	TL	UT	Add Stroke	
		NPTF[1]	SAE[2]								LB	P
1.50	2.50	1/2	10	0.38	1.75	1.50	0.42	1.000	1.00	4.50	5.00	2.88
2.00	3.00	1/2	10	0.63	1.75	1.50	0.57	1.375	1.38	5.75	5.25	2.88
2.50	3.50	1/2	10	0.63	1.75	1.50	0.57	1.375	1.38	6.25	5.38	3.00
3.25	4.50	3/4	12	0.75	2.00	1.75	0.68	1.750	1.75	8.00	6.25	3.50
4.00	5.00	3/4	12	0.88	2.00	1.75	0.68	1.750	1.75	8.50	6.63	3.75
5.00	6.50	3/4	12	0.88	2.00	1.75	0.94	1.750	1.75	10.00	7.13	4.25
6.00	7.50	1	16	1.00	2.25	2.25	1.05	2.000	2.00	11.50	8.38	4.88

[1]NPTF ports are available at no extra charge.
[2]SAE straight thread ports are standard and are indicated by port number.

Style D – Dimensional and Mounting Data

Bore Ø	Rod No.	MM Rod Ø	W	XG	Y	Add Stroke
						ZB Max.
1.50	1 (std.)	0.625	0.63	1.88	2.00	6.29
	2	1.000	1.00	2.25	2.38	6.67
2.00	1 (std.)	1.000	0.75	2.25	2.38	6.81
	2	1.375	1.00	2.50	2.63	7.06
2.50	1 (std.)	1.000	0.75	2.25	2.38	6.93
	2	1.750	1.25	2.75	2.88	7.43
	3	1.375	1.00	2.50	2.63	7.18
3.25	1 (std.)	1.375	0.88	2.63	2.75	8.06
	2	2.000	1.25	3.00	3.13	8.43
	3	1.750	1.13	2.88	3.00	8.31
4.00	1 (std.)	1.750	1.00	2.88	3.00	8.56
	2	2.500	1.38	3.25	3.38	8.94
	3	2.000	1.13	3.00	3.13	8.68
5.00	1 (std.)	2.000	1.13	3.00	3.13	9.44
	2	3.500	1.38	3.25	3.38	9.69
	3	2.500	1.38	3.25	3.38	9.69
	4	3.000	1.38	3.25	3.38	9.69
6.00	1 (std.)	2.500	1.25	3.38	3.50	10.93
	2	4.000	1.25	3.38	3.50	10.93
	3	3.000	1.25	3.38	3.50	10.93
	4	3.500	1.25	3.38	3.50	10.93

⚠PROP 65 WARNING **WARNING:** This product can expose you to chemicals including **Lead and Lead Compounds** which are known to the State of California to cause cancer and birth defects or other reproductive harm. For more information go to www.P65Warnings.ca.gov

Cap Trunnion Mounting
Style DB
(NFPA Style MT2)

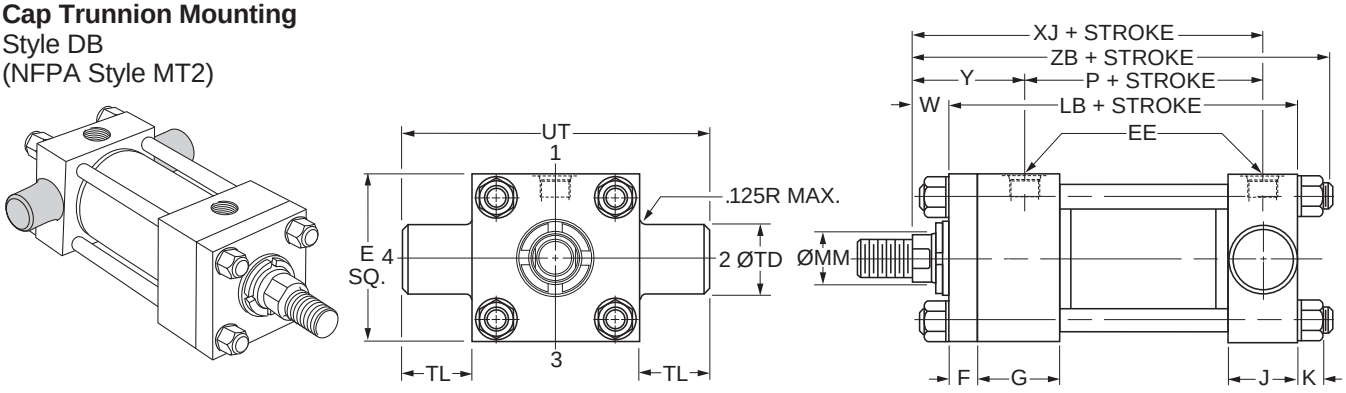

Style DB – Dimensional and Mounting Data

Bore Ø	E	EE		F	G	J	K Max.	TD Ø +.000 -.001	TL	UT	Add Stroke	
		NPTF[1]	SAE[2]								LB	P
1.50	2.50	1/2	10	0.38	1.75	1.50	0.42	1.000	1.00	4.50	5.00	2.88
2.00	3.00	1/2	10	0.63	1.75	1.50	0.57	1.375	1.38	5.75	5.25	2.88
2.50	3.50	1/2	10	0.63	1.75	1.50	0.57	1.375	1.38	6.25	5.38	3.00
3.25	4.50	3/4	12	0.75	2.00	1.75	0.68	1.750	1.75	8.00	6.25	3.50
4.00	5.00	3/4	12	0.88	2.00	1.75	0.68	1.750	1.75	8.50	6.63	3.75
5.00	6.50	3/4	12	0.88	2.00	1.75	0.94	1.750	1.75	10.00	7.13	4.25
6.00	7.50	1	16	1.00	2.25	2.25	1.05	2.000	2.00	11.50	8.38	4.88

[1]NPTF ports are available at no extra charge.
[2]SAE straight thread ports are standard and are indicated by port number.

Style DB – Dimensional and Mounting Data

Bore Ø	Rod No.	MM Rod Ø	W	Y	Add Stroke	
					XJ	ZB Max.
1.50	1 (std.)	0.625	0.63	2.00	4.88	6.29
	2	1.000	1.00	2.38	5.25	6.67
2.00	1 (std.)	1.000	0.75	2.38	5.25	6.81
	2	1.375	1.00	2.63	5.50	7.06
2.50	1 (std.)	1.000	0.75	2.38	5.38	6.93
	2	1.750	1.25	2.88	5.88	7.43
	3	1.375	1.00	2.63	5.63	7.18
3.25	1 (std.)	1.375	0.88	2.75	6.25	8.06
	2	2.000	1.25	3.13	6.63	8.43
	3	1.750	1.13	3.00	6.50	8.31
4.00	1 (std.)	1.750	1.00	3.00	6.75	8.56
	2	2.500	1.38	3.38	7.13	8.94
	3	2.000	1.13	3.13	6.88	8.68
5.00	1 (std.)	2.000	1.13	3.13	7.38	9.44
	2	3.500	1.38	3.38	7.63	9.69
	3	2.500	1.38	3.38	7.63	9.69
	4	3.000	1.38	3.38	7.63	9.69
6.00	1 (std.)	2.500	1.25	3.50	8.38	10.93
	2	4.000	1.25	3.50	8.38	10.93
	3	3.000	1.25	3.50	8.38	10.93
	4	3.500	1.25	3.50	8.38	10.93

⚠**PROP 65 WARNING** **WARNING:** This product can expose you to chemicals including **Lead and Lead Compounds** which are known to the State of California to cause cancer and birth defects or other reproductive harm. For more information go to www.P65Warnings.ca.gov

Intermediate Fixed Trunnion Mounting
Style DD
(NFPA Style MT4)

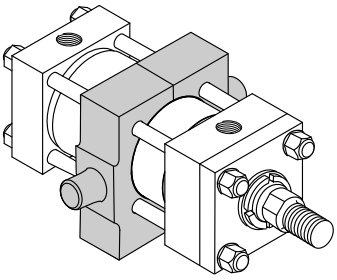

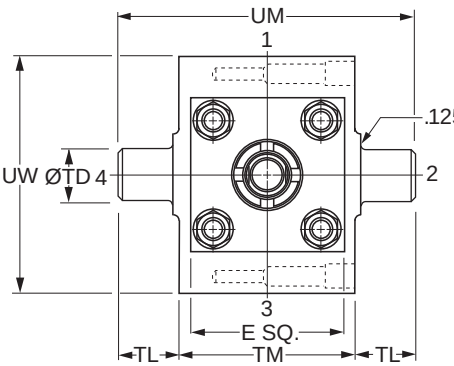

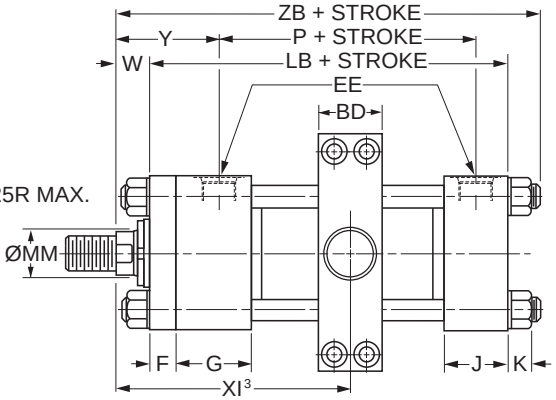

Style DD – Dimensional and Mounting Data

Bore Ø	BD	E	EE		F	G	J	K Max.	TD Ø +.000 -.001	TL	TM	UM	UW	Add Stroke	
			NPTF[1]	SAE[2]										LB	P
1.50	1.25	2.50	1/2	10	0.38	1.75	1.50	0.42	1.000	1.00	3.00	5.00	3.38	5.00	2.88
2.00	1.50	3.00	1/2	10	0.63	1.75	1.50	0.57	1.375	1.38	3.50	6.25	4.13	5.25	2.88
2.50	1.50	3.50	1/2	10	0.63	1.75	1.50	0.57	1.375	1.38	4.00	6.75	4.63	5.38	3.00
3.25	2.00	4.50	3/4	12	0.75	2.00	1.75	0.68	1.750	1.75	5.00	8.50	5.81	6.25	3.50
4.00	2.00	5.00	3/4	12	0.88	2.00	1.75	0.68	1.750	1.75	5.50	9.00	6.38	6.63	3.75
5.00	2.00	6.50	3/4	12	0.88	2.00	1.75	0.94	1.750	1.75	7.00	10.50	7.75	7.13	4.25
6.00	3.00	7.50	1	16	1.00	2.25	2.25	1.05	2.000	2.00	8.50	12.50	10.38	8.38	4.88

[1]NPTF ports are available at no extra charge.
[2]SAE straight thread ports are standard and are indicated by port number.

Style DD – Dimensional and Mounting Data

Bore Ø	Rod No.	MM Rod Ø	W	Y	Minimum XI[3]		Style DD Min. Stroke	Add Stroke		
					Styles 4, 8 & 9	Style 55		Maximum XI[4]		ZB Max
								Styles 4, 8 & 9	Style 55	
1.50	1 (std.)	0.625	0.63	2.00	3.44	4.19	0	3.44	4.19	6.29
	2	1.000	1.00	2.38	3.81	4.81	0	3.81	4.81	6.67
2.00	1 (std.)	1.000	0.75	2.38	3.94	4.94	0.25	3.69	4.69	6.81
	2	1.375	1.00	2.63	4.19	5.31	0.25	3.94	5.06	7.06
2.50	1 (std.)	1.000	0.75	2.38	3.94	4.94	0.13	3.81	4.81	6.93
	2	1.750	1.25	2.88	4.44	5.69	0.13	4.31	5.56	7.43
	3	1.375	1.00	2.63	4.19	5.31	0.13	4.06	5.19	7.18
3.25	1 (std.)	1.375	0.88	2.75	4.69	5.81	0.38	4.31	5.44	8.06
	2	2.000	1.25	3.13	5.06	6.81	0.38	4.69	6.44	8.43
	3	1.750	1.13	3.00	4.94	6.19	0.38	4.56	5.81	8.31
4.00	1 (std.)	1.750	1.00	3.00	4.94	6.19	0.13	4.81	6.06	8.56
	2	2.500	1.38	3.38	5.31	7.56	0.13	5.19	7.44	8.94
	3	2.000	1.13	3.13	5.06	6.81	0.13	4.94	6.69	8.68
5.00	1 (std.)	2.000	1.13	3.13	5.06	6.81	0	5.44	7.19	9.44
	2	3.500	1.38	3.38	5.31	8.69	0	5.69	9.06	9.69
	3	2.500	1.38	3.38	5.31	7.56	0	5.69	7.94	9.69
	4	3.000	1.38	3.38	5.31	7.94	0	5.69	8.31	9.69
6.00	1 (std.)	2.500	1.25	3.50	6.06	8.31	0.25	5.81	8.06	10.93
	2	4.000	1.25	3.50	6.06	9.56	0.25	5.81	9.31	10.93
	3	3.000	1.25	3.50	6.06	8.69	0.25	5.81	8.44	10.93
	4	3.500	1.25	3.50	6.06	9.44	0.25	5.81	9.19	10.93

[3]Dimension XI to be specified by customer. Reference point for rod end Style 55 is end of piston rod.
[4]Dimensions shown are valid for standard W and WG dimension.

⚠**PROP 65 WARNING** **WARNING:** This product can expose you to chemicals including **Lead and Lead Compounds** which are known to the State of California to cause cancer and birth defects or other reproductive harm. For more information go to www.P65Warnings.ca.gov

Heavy Duty Intermediate Fixed Trunnion Mounting

Style DE
(NFPA Style MT4)

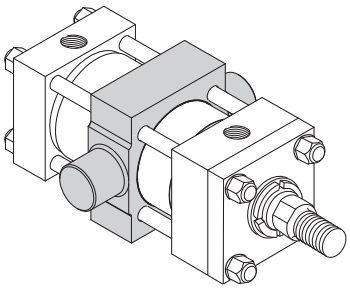

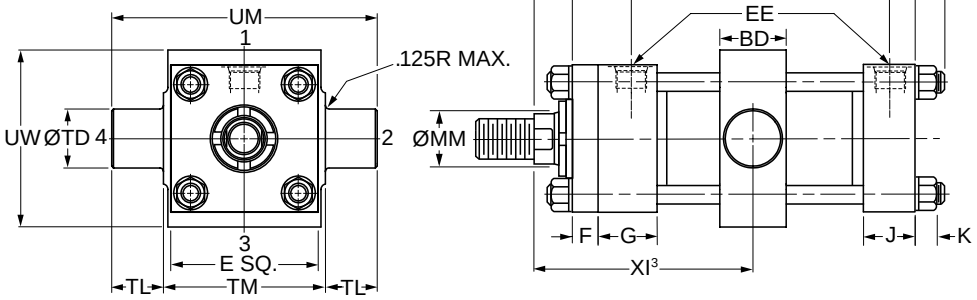

Style DE – Dimensional and Mounting Data

Bore Ø	BD	E	EE		F	G	J	K Max.	TD Ø +.000 -.001	TL	TM	UM	UW	Add Stroke	
			NPTF[1]	SAE[2]										LB	P
4.00	2.25	5.00	3/4	12	0.88	2.00	1.75	0.68	2.000	1.75	5.50	9.00	6.00	6.63	3.75
5.00	2.75	6.50	3/4	12	0.88	2.00	1.75	0.94	2.500	1.75	7.00	10.50	7.50	7.13	4.25
6.00	3.25	7.50	1	16	1.00	2.25	2.25	1.05	3.000	2.00	8.50	12.50	9.50	8.38	4.88

[1]NPTF ports are available at no extra charge.
[2]SAE straight thread ports are standard and are indicated by port number.

Style DE – Dimensional and Mounting Data

Bore Ø	Rod No.	MM Rod Ø	W	Y	Minimum XI[3]		Style DE Minimum Stroke	Add Stroke		
					Styles 4, 8 & 9	Style 55		Maximum XI[4]		ZB Max
								Styles 4, 8 & 9	Style 55	
4.00	1 (std.)	1.750	1.00	3.00	5.06	6.31	0.38	4.69	5.94	8.56
	2	2.500	1.38	3.38	5.44	7.69	0.38	5.06	7.31	8.94
	3	2.000	1.13	3.13	5.19	6.94	0.38	4.81	6.56	8.68
5.00	1 (std.)	2.000	1.13	3.13	5.44	7.19	0.38	5.06	6.81	9.44
	2	3.500	1.38	3.38	5.69	9.06	0.38	5.31	8.69	9.69
	3	2.500	1.38	3.38	5.69	7.94	0.38	5.31	7.56	9.69
	4	3.000	1.38	3.38	5.69	8.31	0.38	5.31	7.94	9.69
6.00	1 (std.)	2.500	1.25	3.50	6.19	8.44	0.50	5.69	7.94	10.93
	2	4.000	1.25	3.50	6.19	9.69	0.50	5.69	9.19	10.93
	3	3.000	1.25	3.50	6.19	8.81	0.50	5.69	8.31	10.93
	4	3.500	1.25	3.50	6.19	9.56	0.50	5.69	9.06	10.93

[3]Dimension XI to be specified by customer. Reference point for rod end Style 55 is end of piston rod.
[4]Dimensions shown are valid for standard W and WG dimension.

⚠**PROP 65 WARNING** **WARNING:** This product can expose you to chemicals including **Lead and Lead Compounds** which are known to the State of California to cause cancer and birth defects or other reproductive harm. For more information go to www.P65Warnings.ca.gov

Spherical Bearing Mounting
Style SB

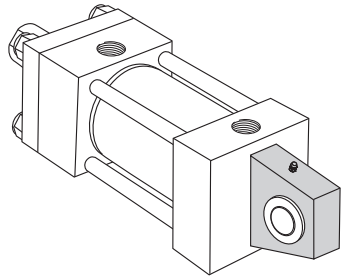

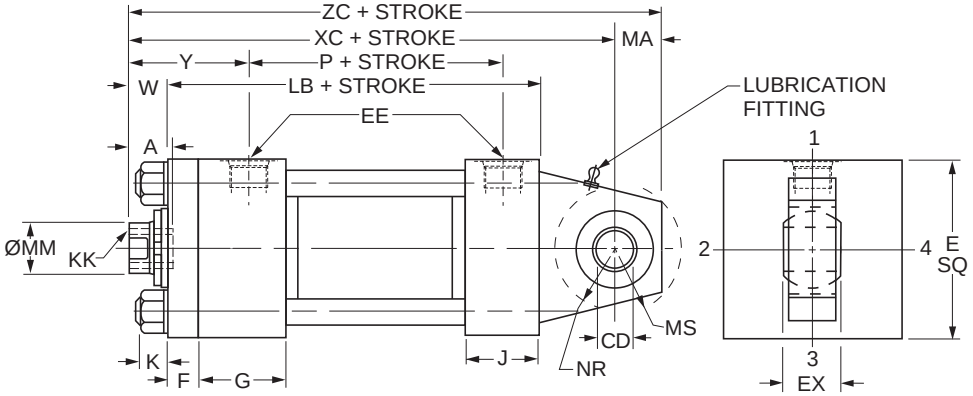

Style SB — Dimensional and Mounting Data

Bore Ø	A	CD[1] Ø +0.0000 -0.0005	E	EE		EX	F	G	J	K Max.	MA	MS	NR	Add Stroke		Maximum Operating psi[2]
				NPTF	SAE									LB	P	
1.50	0.75	0.5000	2.50	1/2	10	0.44	0.38	1.75	1.50	0.42	0.75	0.94	0.63	5.00	2.88	1500
2.00	1.13	0.7500	3.00	1/2	10	0.66	0.63	1.75	1.50	0.57	1.00	1.38	1.00	5.25	2.88	2200
2.50	1.13	0.7500	3.50	1/2	10	0.66	0.63	1.75	1.50	0.57	1.00	1.38	1.00	5.38	3.00	1450
3.25	1.63	1.0000	4.50	3/4	12	0.88	0.75	2.00	1.75	0.68	1.25	1.69	1.25	6.25	3.50	1500
4.00	2.00	1.3750	5.00	3/4	12	1.19	0.88	2.00	1.75	0.68	1.88	2.44	1.63	6.63	3.75	1850
5.00	2.25	1.7500	6.50	3/4	12	1.53	0.88	2.00	1.75	0.94	2.50	2.88	2.06	7.13	4.25	2000
6.00	3.00	2.0000	7.50	1	16	1.75	1.00	2.25	2.25	1.05[3]	2.50	3.31	2.38	8.38	4.88	1800

[1] Diameter CD is hole diameter.
[2] Maximum operating pressure at 4:1 design factor is based on tensile strength of material. Pressure ratings are based on standard bearing ratings.
[3] 6.00" bore is constructed with tie rod nuts on both ends.

Style SB – Dimensional and Mounting Data

Bore Ø	Rod No.	MM Rod Ø	Thread		W	Y	Add Stroke		
			Style 9 KK[4]	Style 7 KK[4]			XC	XL	ZC
1.50	1 (std.)	0.625	7/16-20	—	0.63	2.00	6.38	7.25	7.13
	2	1.000	—	7/16-20	1.00	2.38	6.75	7.63	7.50
2.00	1 (std.)	1.000	3/4-16	—	0.75	2.38	7.25	8.50	8.25
	2	1.375	—	3/4-16	1.00	2.63	7.50	8.75	8.50
2.50	1 (std.)	1.000	3/4-16	—	0.75	2.38	7.38	8.63	8.38
	2	1.750	—	3/4-16	1.25	2.88	7.88	9.13	8.88
	3	1.375	—	3/4-16	1.00	2.63	7.63	8.88	8.63
3.25	1 (std.)	1.375	1-14	—	0.88	2.75	8.63	10.50	9.88
	2	2.000	—	1-14	1.25	3.13	9.00	10.88	10.25
	3	1.750	—	1-14	1.13	3.00	8.88	10.75	10.13
4.00	1 (std.)	1.750	1 1/4-12	—	1.00	3.00	9.75	11.88	11.63
	2	2.500	—	1 1/4-12	1.38	3.38	10.13	12.25	12.00
	3	2.000	—	1 1/4-12	1.13	3.13	9.88	12.00	11.75
5.00	1 (std.)	2.000	1 1/2-12	—	1.13	3.13	10.50	13.00	13.00
	2	3.500	—	1 1/2-12	1.38	3.38	10.75	13.25	13.25
	3	2.500	—	1 1/2-12	1.38	3.38	10.75	13.25	13.25
	4	3.000	—	1 1/2-12	1.38	3.38	10.75	13.25	13.25
6.00	1 (std.)	2.500	1 7/8-12	—	1.25	3.50	12.13	14.88	14.63
	2	4.000	—	1 7/8-12	1.25	3.50	12.13	14.88	14.63
	3	3.000	—	1 7/8-12	1.25	3.50	12.13	14.88	14.63
	4	3.500	—	1 7/8-12	1.25	3.50	12.13	14.88	14.63

Style SB – Recommended maximum swivel angle on each side of the cylinder centerline.

Bore Ø	Head End Mounted		Cap End Mounted	
	Angle a	Tan. of a	Angle a	Tan. of a
1.50	2.00°	.035	2.00°	.035
2.00	2.50°	.044	4.50°	.079
2.50	2.50°	.044	4.50°	.079
3.25	3.00°	.052	3.00°	.052
4.00	2.50°	.044	3.00°	.052
5.00	3.00°	.052	3.00°	.052
6.00	3.00°	.052	3.00°	.052

Note: Dimension X is the maximum off center mounting of the cylinder. To determine dimension X for various stroke lengths multiply the distance between pivot pin holes by tangent of angle a. For extended position use X = XL + 2X stroke.

Mounting Information
Head End Mounting

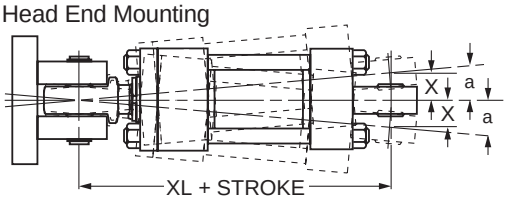

Cap End Mounting

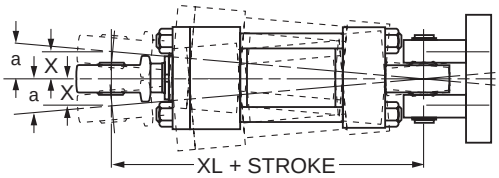

[4] Style 9 and Style 7 threads listed are for a spherical rod eye (sold separately) with pin diameter that matches the cap pin.

⚠PROP 65 WARNING **WARNING:** This product can expose you to chemicals including **Lead and Lead Compounds** which are known to the State of California to cause cancer and birth defects or other reproductive harm. For more information go to www.P65Warnings.ca.gov

Spherical Bearing Mounting
Style SE

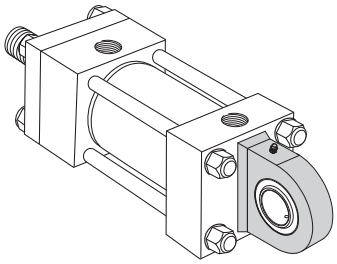

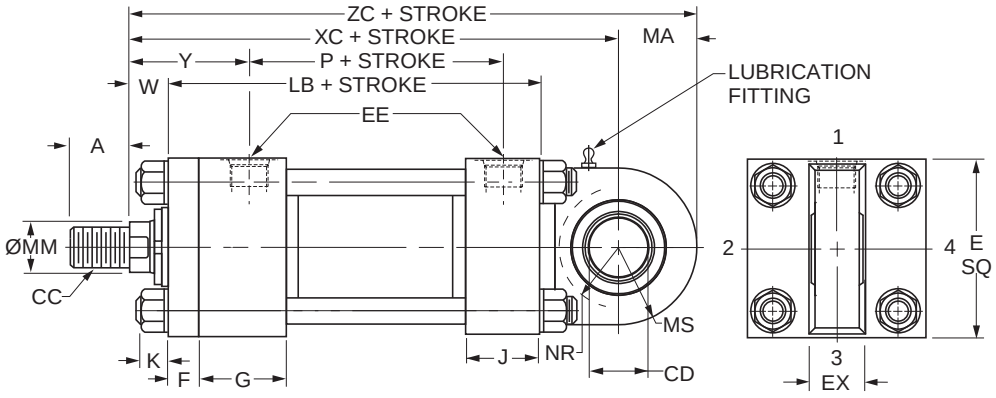

Style SE — Dimensional and Mounting Data

Bore Ø	A	CD[1] Ø	E	EE		EX	F	G	J	K Max.	MA	MS	NR	Add Stroke	
				NPTF	SAE									LB	P
1.50	0.75	0.7500$^{-0.0005}$	2.50	1/2	10	0.66	0.38	1.75	1.50	0.42	1.00	1.00	0.75	5.00	2.88
2.00	1.13	1.0000$^{-0.0005}$	3.00	1/2	10	0.88	0.63	1.75	1.50	0.57	1.25	1.25	1.00	5.25	2.88
2.50	1.13	1.2500$^{-0.0005}$	3.50	1/2	10	1.09	0.63	1.75	1.50	0.57	1.50	1.50	1.31	5.38	3.00
3.25	1.63	1.5000$^{-0.0005}$	4.50	3/4	12	1.31	0.75	2.00	1.75	0.68	2.00	2.00	1.75	6.25	3.50
4.00	2.00	2.0000$^{-0.0005}$	5.00	3/4	12	1.75	0.88	2.00	1.75	0.68	2.25	2.25	2.13	6.63	3.75
5.00	2.25	2.5000$^{-0.0006}$	6.50	3/4	12	2.19	0.88	2.00	1.75	0.94	3.00	3.00	2.75	7.13	4.25
6.00	3.00	3.0000$^{-0.0006}$	7.50	1	16	2.63	1.00	2.25	2.25	1.05	3.50	3.50	3.13	8.38	4.88

[1] Diameter CD is hole diameter. [2] Maximum operating pressure at 4:1 design factor is based on tensile strength of material. Pressure ratings are based on standard bearing ratings.

Style SE – Dimensional and Mounting Data

Bore Ø	Rod No.	MM Rod Ø	Thread Style 8 CC[3]	A	W	Y	Add Stroke		
							XC	XL	ZC
1.50	1 (std.)	0.625	1/2-20	0.75	0.63	2.00	6.88	9.01	7.88
	2	1.000	[3]	[3]	1.00	2.38	7.25	9.38	8.25
2.00	1 (std.)	1.000	7/8-14	1.13	0.75	2.38	7.56	10.56	8.81
	2	1.375	[3]	[3]	1.00	2.63	7.81	10.81	9.06
2.50	1 (std.)	1.000	7/8-14	1.13	0.75	2.38	7.75	10.75	9.25
	2	1.750	[3]	[3]	1.25	2.88	8.25	11.25	9.75
	3	1.375	[3]	[3]	1.00	2.63	8.00	11.00	9.50
3.25	1 (std.)	1.375	1 1/4-12	1.63	0.88	2.75	9.25	13.38	11.25
	2	2.000	[3]	[3]	1.25	3.13	9.63	13.75	11.63
	3	1.750	[3]	[3]	1.13	3.00	9.50	13.63	11.50
4.00	1 (std.)	1.750	1 1/2-12	2.00	1.00	3.00	10.13	15.13	12.38
	2	2.500	[3]	[3]	1.38	3.38	10.50	15.50	12.75
	3	2.000	[3]	[3]	1.13	3.13	10.25	15.25	12.50
5.00	1 (std.)	2.000	1 3/4-12	2.25	1.13	3.13	11.50	17.25	14.50
	2	3.500	[3]	[3]	1.38	3.38	11.75	17.50	14.75
	3	2.500	[3]	[3]	1.38	3.38	11.75	17.50	14.75
	4	3.000	[3]	[3]	1.38	3.38	11.75	17.50	14.75
6.00	1 (std.)	2.500	2 1/4-12	3.00	1.25	3.50	13.38	20.38	16.88
	2	4.000	[3]	[3]	1.25	3.50	13.38	20.38	16.88
	3	3.000	[3]	[3]	1.25	3.50	13.38	20.38	16.88
	4	3.500	[3]	[3]	1.25	3.50	13.38	20.38	16.88

Style SE – Recommended maximum swivel angle on each side of the cylinder centerline.

Bore Ø	Head End Mounted		Cap End Mounted	
	Angle a	Tan. of a	Angle a	Tan. of a
1.50	2.50°	0.044	3.00°	0.052
2.00	3.00°	0.052	3.00°	0.052
2.50	3.00°	0.052	3.00°	0.052
3.25	3.00°	0.052	2.75°	0.048
4.00	3.00°	0.052	3.00°	0.052
5.00	3.00°	0.052	3.00°	0.052
6.00	3.00°	0.052	3.00°	0.052

Note: Dimension X is the maximum off center mounting of the cylinder. To determine dimension X for various stroke lengths multiply the distance between pivot pin holes by tangent of angle a. For extended position use X = XL + 2X stroke.

Mounting Information

Head End Mounting

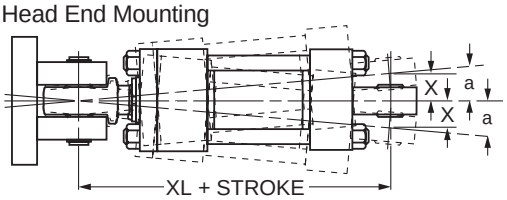

Cap End Mounting

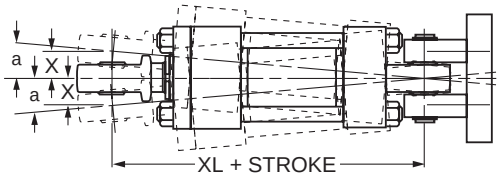

[3] To match pin diameter in rod eye and cap, when an oversize rod is required, specify rod end style '3', 'CC' thread and 'A' thread length for the standard rod diameter (Rod No. 1 for the bore), and 'W' for the oversize rod. Order the rod eye and clevis bracket for the required bore size from the tables on the Style SE Spherical Bearing Accessories page.

⚠PROP 65 WARNING **WARNING:** This product can expose you to chemicals including **Lead and Lead Compounds** which are known to the State of California to cause cancer and birth defects or other reproductive harm. For more information go to www.P65Warnings.ca.gov

Double Rod Cylinder
Style K

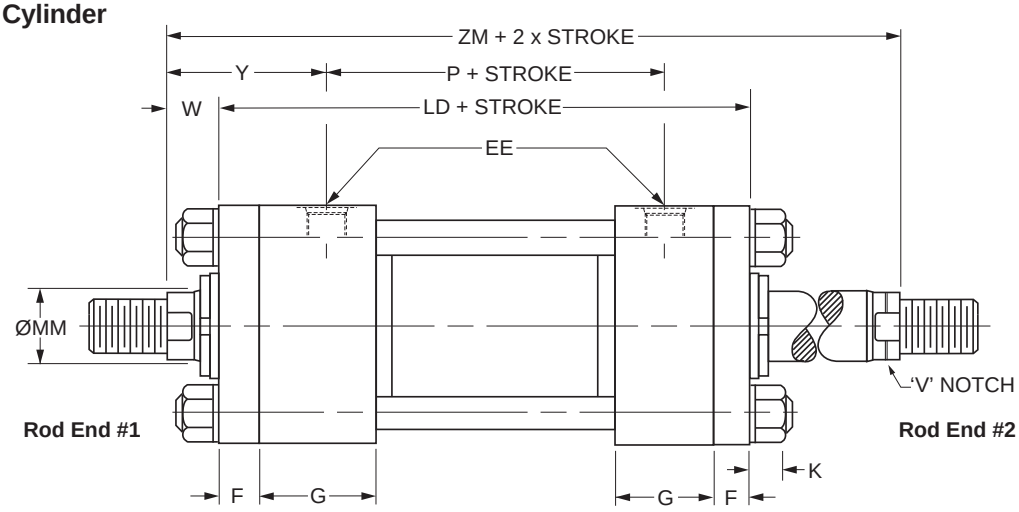

Double Rod End Mounting Styles

See Mounting Groups page in Section H for guidance on double rod end cylinder mounting style selection.

Mounting Styles for Single Rod Models	Mounting Styles for Corresponding Double Rod Models[1]		Dimensions Shown on This Page Supplement Dimensions on 1.50" - 6.00" Bore Pages Listed Below
	Load Connected To Rod On Cylinder Mounting End	Load Connected To Rod Opposite Cylinder Mounting End	
T	KT	KT	14
TB	KTB	KTC	14
TD	KTD	KTD	14
J	KJ	KH	15
JB	KJB	KHB	16
JJ	KJJ	KHH	17
C	KC	KC	21
F	KF	KF	22
D	KD	KDB	24
DD	KDD[2]	KDD[2]	26
DE	KDE[2]	KDE[2]	27

[1] Connect load to piston rod without 'V' notch. If only one end of the Double Rod Cylinder is to be cushioned, be sure to clearly specify which end this will be.

[2] Specify XI dimension for Styles DD & DE from #1 rod end (without 'V' notch).

Bore Ø	Rod No.	MM Rod Ø	Add Stroke			Add 2X Stroke
			LD	SNK	SSK	ZM
1.50	1 (std.)	0.625	5.63	2.88	4.13	6.88
	2	1.000	5.63	2.88	4.13	7.63
2.00	1 (std.)	1.000	6.13	2.88	3.88	7.63
	2	1.375	6.13	2.88	3.88	8.13
2.50	1 (std.)	1.000	6.25	3.00	3.63	7.75
	2	1.750	6.25	3.00	3.63	8.75
	3	1.375	6.25	3.00	3.63	8.25
3.25	1 (std.)	1.375	7.25	3.50	4.38	9.00
	2	2.000	7.25	3.50	4.38	9.75
	3	1.750	7.25	3.50	4.38	9.50
4.00	1 (std.)	1.750	7.75	3.75	4.25	9.75
	2	2.500	7.75	3.75	4.25	10.50
	3	2.000	7.75	3.75	4.25	10.00
5.00	1 (std.)	2.000	8.25	4.25	4.75	10.50
	2	3.500	8.25	4.25	4.75	11.00
	3	2.500	8.25	4.25	4.75	11.00
	4	3.000	8.25	4.25	4.75	11.00
6.00	1 (std.)	2.500	9.38	4.88	5.13	11.88
	2	4.000	9.38	4.88	5.13	11.88
	3	3.000	9.38	4.88	5.13	11.88
	4	3.500	9.38	4.88	5.13	11.88
Replaces On single rod mounting styles:			LB	SN	SS	–
			All Mtg. Styles	F	C	All Mtg. Styles

How to Use Double Rod Cylinder Dimension Drawings

To determine dimensions for a double rod cylinder, first refer to the desired single rod mounting style cylinder shown on preceding pages of this catalog. (See table above.) After selecting necessary dimensions from that drawing, return to this page supplement the single rod dimensions with those shown on drawing at right and dimension table below. Note that double rod cylinders have a head (Dim. G) at both ends and that dimension LD replaces LB. The double rod dimensions differ from, or are in addition to those for single rod cylinders shown on preceding pages and provide the information needed to completely dimension a double rod cylinder.

On a double rod cylinder where the two rod ends are different, be sure to clearly state which rod end is to be assembled at which end. Port position 1 is standard. If other than standard, specify pos. 2, 3 or 4 when viewed from rod end #1 only. See port position information in Section H.

⚠**PROP 65 WARNING** **WARNING:** This product can expose you to chemicals including **Lead and Lead Compounds** which are known to the State of California to cause cancer and birth defects or other reproductive harm. For more information go to www.P65Warnings.ca.gov

Notes

⚠**PROP 65 WARNING** **WARNING:** This product can expose you to chemicals including **Lead and Lead Compounds** which are known to the State of California to cause cancer and birth defects or other reproductive harm. For more information go to www.P65Warnings.ca.gov

Parker Hannifin Corporation
Cylinder Division
Des Plaines, Illinois USA

Standard Specifications

- Heavy Duty Service — ANSI/(NFPA) T3.6.7R3 - 2009 Specifications and Mounting Dimension Standards
- Standard Construction — Square Head – Tie Rod Design
- Nominal Pressure — 3000 psi[1]
- Standard Fluid — Hydraulic Oil
- Standard Temperature — -10°F to +165°F[2]
- Piston Rod Diameter — 3.000" through 5.500"

In line with our policy of continuing product improvement, specifications in this catalog are subject to change.

- Mounting Styles — 17 standard styles at various application ratings
- Strokes — Available in any practical stroke length
- Cushions — Optional at either end or both ends of stroke
- Rod Ends — Four Standard Choices — specials to order

[1] If hydraulic operating pressure exceeds 3000 psi, send application data for engineering evaluation and recommendation. See Section H for actual design factors.

[2] See Section H for higher temperature service.

Available Mounting Styles

Tie Rods Extended Head End
Style TB 7.00" & 8.00"
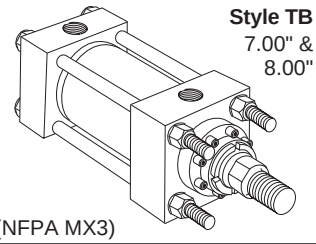
(NFPA MX3)

Tie Rods Extended Cap End
Style TC 7.00" & 8.00"
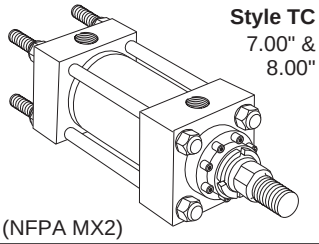
(NFPA MX2)

Tie Rods Extended Both Ends
Style TD 7.00" & 8.00"
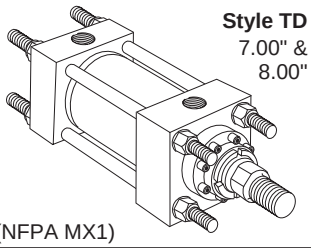
(NFPA MX1)

Head Rectangular Flange
Style J 7.00" & 8.00"
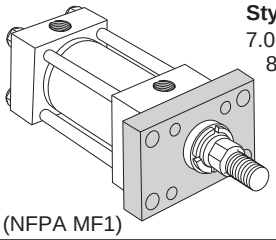
(NFPA MF1)

Head Square Flange
Style JB 7.00" & 8.00"
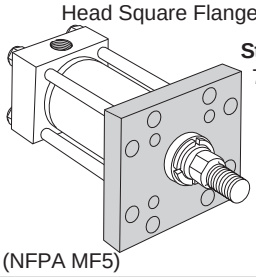
(NFPA MF5)

Head Rectangular
Style JJ 7.00" & 8.00"
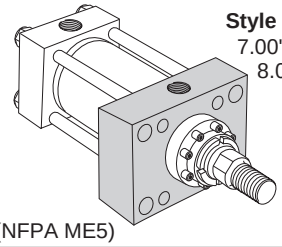
(NFPA ME5)

Cap Rectangular Flange
Style H 7.00" & 8.00"
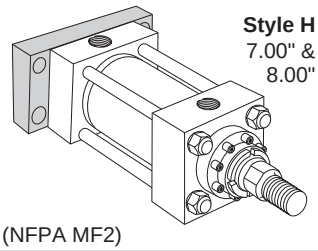
(NFPA MF2)

Cap Square Flange
Style HB 7.00" & 8.00"
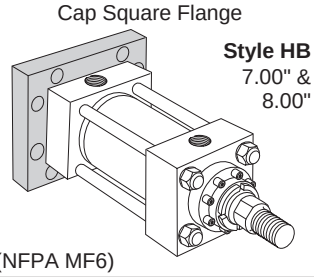
(NFPA MF6)

Cap Rectangular
Style HH 7.00" & 8.00"
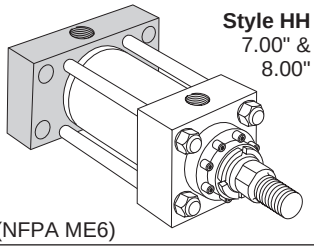
(NFPA ME6)

Side Lug
Style C 7.00" & 8.00"
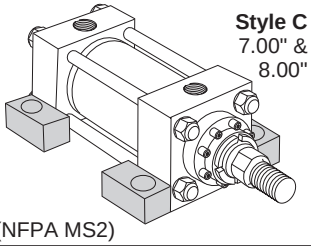
(NFPA MS2)

Side Tapped
Style F 7.00" & 8.00"
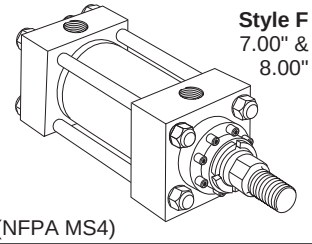
(NFPA MS4)

Cap Fixed Clevis
Style BB 7.00" & 8.00"
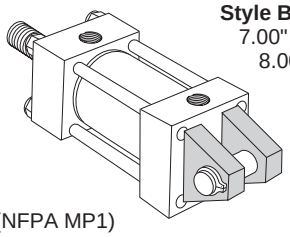
(NFPA MP1)

Head Trunnion
Style D 7.00" & 8.00"
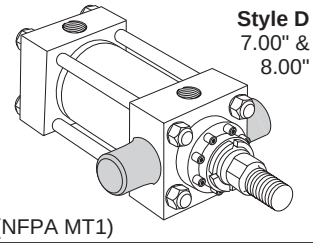
(NFPA MT1)

Cap Trunnion
Style DB 7.00" & 8.00"
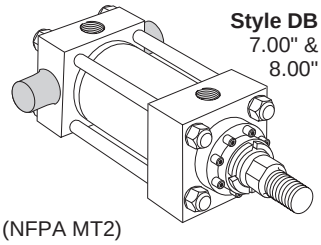
(NFPA MT2)

Intermediate Fixed Trunnion
Style DD 7.00" & 8.00"
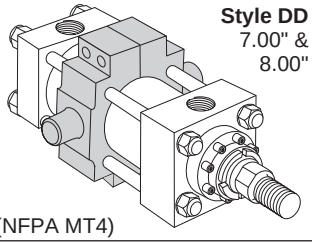
(NFPA MT4)

HD Intermediate Trunnion Mount
Style DE[1] 7.00" & 8.00"
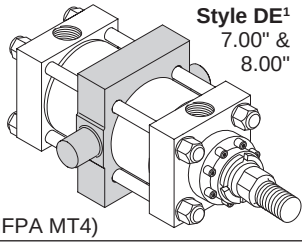
(NFPA MT4)

HD Spherical Bearing
Style SE 7.00" & 8.00"
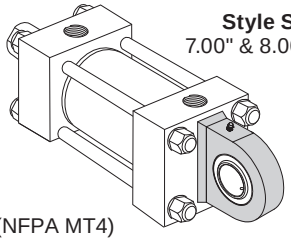
(NFPA MT4)

Double Rod Cylinders
Style KT Shown
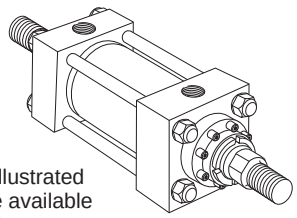
Most of the above illustrated mounting styles are available in double rod cylinders.

[1]Style DE Mount conforms to NFPA MT4 dimensional standard.

NOTE: Series 3H Hydraulic Cylinders fully meet ANSI/(NFPA) T3.6.7R3-2009 Specifications and Mounting Dimension Standards for Square Head Industrial Fluidpower Cylinders.

⚠PROP 65 WARNING **WARNING:** This product can expose you to chemicals including **Lead and Lead Compounds** which are known to the State of California to cause cancer and birth defects or other reproductive harm. For more information go to www.P65Warnings.ca.gov

Rod End Dimensions – 7.00" & 8.00" Bore

Thread Style 4 (NFPA Style SM)
Small Male

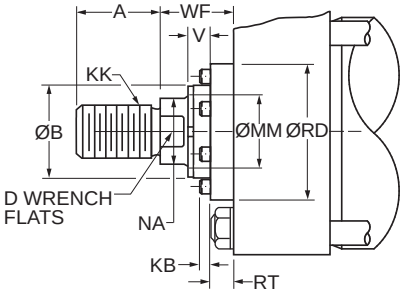

Thread Style 8 (NFPA Style IM)
Intermediate Male

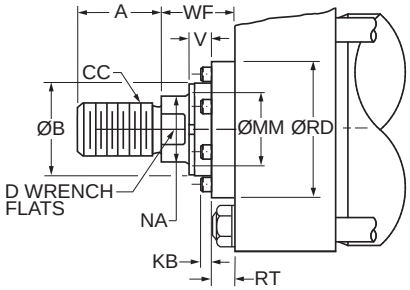

Thread Style 9[2] (NFPA Style SF)
Small Female

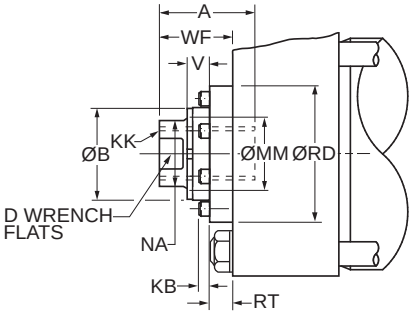

Thread Style 55[1]

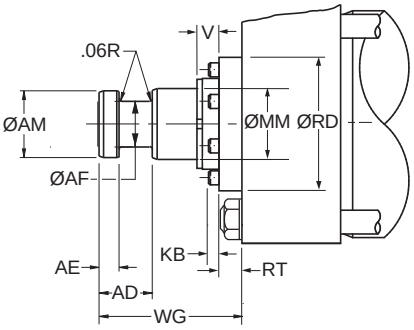

Rod End Dimensions – 7.00" & 8.00" Bore

Bore Ø	Rod No.	MM Rod Ø	Thread		Rod Extensions and Pilot Dimensions								
			Style 8 CC	Style 4 & 9 KK	A	B Ø +.000 -.002	D	KB	NA	V	RD Ø	RT	WF
7.00	1 (std.)	3.000	2 3/4-12	2 1/4-12	3.50	3.749	2.63	0.220	2.88	0.63	5.26	0.63	2.25
	2	5.000	4 3/4-12	3 1/2-12	5.00	5.749	-[3]	0.000	4.88	0.34	7.25	0.91	2.25
	3	3.500	3 1/4-12	2 1/2-12	3.50	4.249	3.00	0.250	3.38	0.63	5.76	0.63	2.25
	4	4.000	3 3/4-12	3-12	4.00	4.749	3.38	0.160	3.88	0.50	6.31	0.75	2.25
	5	4.500	4 1/4-12	3 1/4-12	4.50	5.249	-[3]	0.160	4.38	0.50	6.94	0.75	2.25
8.00	1 (std.)	3.500	3 1/4-12	2 1/2-12	3.50	4.249	3.00	0.250	3.38	0.63	5.76	0.63	2.25
	2	5.500	5 1/4-12	4-12	5.50	6.249	-[3]	0.000	5.38	0.34	7.94	0.91	2.25
	3	4.000	3 3/4-12	3-12	4.00	4.749	3.38	0.160	3.88	0.50	6.31	0.75	2.25
	4	4.500	4 1/4-12	3 1/4-12	4.50	5.249	-[3]	0.160	4.38	0.50	6.94	0.75	2.25
	5	5.000	4 3/4-12	3 1/2-12	5.00	5.749	-[3]	0.000	4.88	0.34	7.25	0.91	2.25

"Special" Thread Style 3

Special thread, extension, rod eye, blank, etc., are also available.

To order, specify "Style 3" and give desired dimensions for KK, A, W or WF. If otherwise special, furnish dimensioned sketch.

Style 55 Rod End

MM Rod Ø	AD	AE +.001 -.001	AF Ø	AM Ø	WG[1]
3.000	2.44	0.874	2.25	2.95	4.88
3.500	2.69	0.999	2.50	3.45	5.63
4.000	2.69	0.999	3.00	3.95	5.75
4.500	3.19	1.499	3.50	4.45	6.50
5.000	3.19	1.499	3.88	4.95	6.63
5.500	3.94	1.874	4.38	5.45	7.50

[1] For special WG dimension, specify "Style 3" and give desired dimension for WG. For other changes, place "S" in the model code, and describe rod end with dimensioned sketch.

[2] Style 9 stroke restrictions may apply. See Style 9 Minimum Stroke Table on How to Order page for details.

[3] These piston rod numbers will have 4 spanner wrench holes instead of wrench flats. See rod drawings on page 117 for dimensions.

⚠ **PROP 65 WARNING** **WARNING:** This product can expose you to chemicals including **Lead and Lead Compounds** which are known to the State of California to cause cancer and birth defects or other reproductive harm. For more information go to www.P65Warnings.ca.gov

Tie Rods Extended Both Ends
Style TD
(NFPA Style MX1)

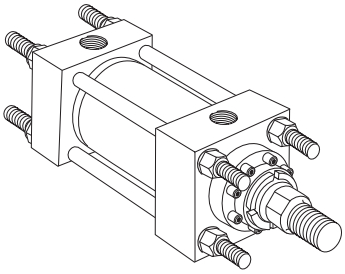

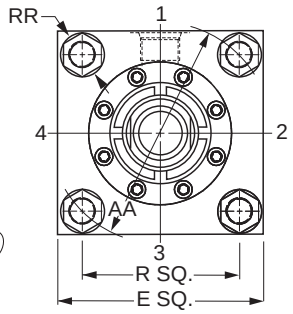

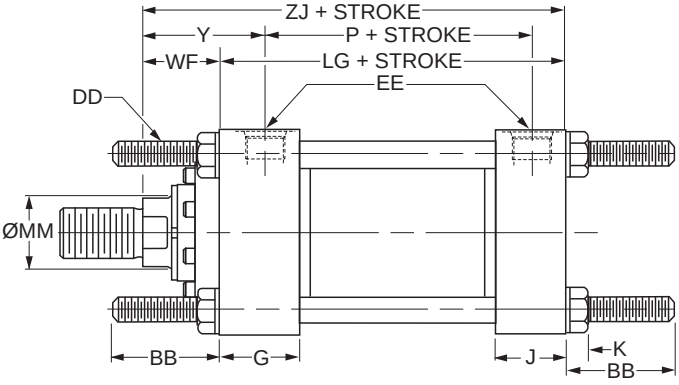

Basic Mounting (T) — NFPA MXO — Not shown is no tie rod extended and can be supplied upon request.

Style TD – Dimensional and Mounting Data

Bore Ø	Rod No.	MM Rod Ø	AA	BB	DD	E	EE		G	J	K Max.	R	RR	WF	Y	Add Stroke		
							NPTF[1]	SAE[2]								LG	P	ZJ
7.00	1 (std.)	3.000	9.31	4.13	1 1/8-12	8.50	1 1/4	20	2.75	2.75	1.16	6.58	1.90	2.25	3.69	8.50	5.63	10.75
	2	5.000	9.31	4.13	1 1/8-12	8.50	1 1/4	20	2.75	2.75	1.16	6.58	1.90	2.25	3.69	8.50	5.63	10.75
	3	3.500	9.31	4.13	1 1/8-12	8.50	1 1/4	20	2.75	2.75	1.16	6.58	1.90	2.25	3.69	8.50	5.63	10.75
	4	4.000	9.31	4.13	1 1/8-12	8.50	1 1/4	20	2.75	2.75	1.16	6.58	1.90	2.25	3.69	8.50	5.63	10.75
	5	4.500	9.31	4.13	1 1/8-12	8.50	1 1/4	20	2.75	2.75	1.16	6.58	1.90	2.25	3.69	8.50	5.63	10.75
8.00	1 (std.)	3.500	10.61	4.50	1 1/4-12	9.50	1 1/2	24	3.00	3.00	1.28	7.50	2.19	2.25	3.81	9.50	6.38	11.75
	2	5.500	10.61	4.50	1 1/4-12	9.50	1 1/2	24	3.00	3.00	1.28	7.50	2.19	2.25	3.81	9.50	6.38	11.75
	3	4.000	10.61	4.50	1 1/4-12	9.50	1 1/2	24	3.00	3.00	1.28	7.50	2.19	2.25	3.81	9.50	6.38	11.75
	4	4.500	10.61	4.50	1 1/4-12	9.50	1 1/2	24	3.00	3.00	1.28	7.50	2.19	2.25	3.81	9.50	6.38	11.75
	5	5.000	10.61	4.50	1 1/4-12	9.50	1 1/2	24	3.00	3.00	1.28	7.50	2.19	2.25	3.81	9.50	6.38	11.75

[1]NPTF ports are available at no extra charge.
[2]SAE straight thread ports are standard and are indicated by port number.

Style TB

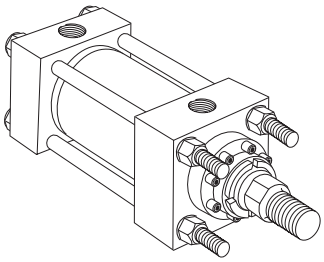

Style TC

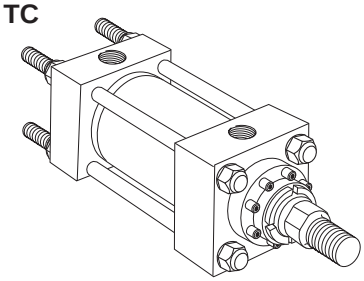

Dimensions for TB and TC Mount may be obtained from the above dimensional table.

⚠**PROP 65 WARNING** **WARNING:** This product can expose you to chemicals including **Lead and Lead Compounds** which are known to the State of California to cause cancer and birth defects or other reproductive harm. For more information go to www.P65Warnings.ca.gov

Head Rectangular Flange Mounting
Style J
(NFPA Style MF1)

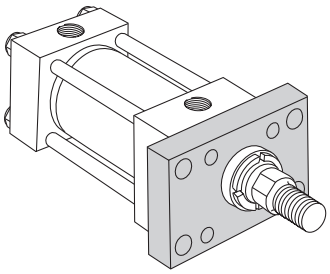

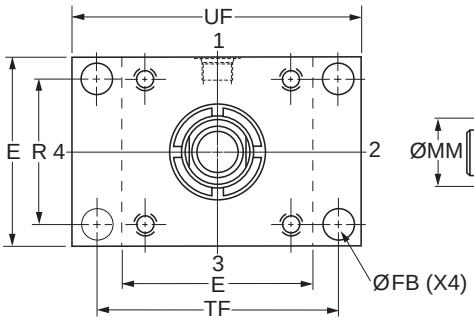

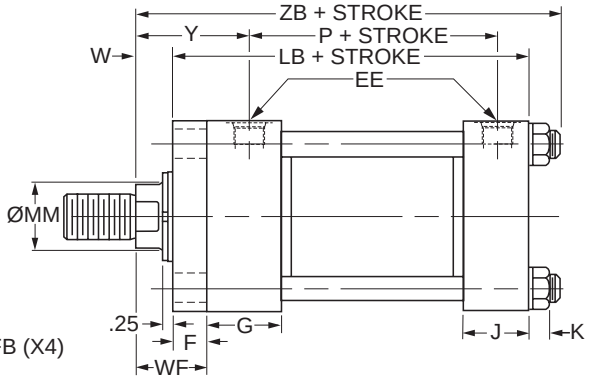

For pressures exceeding those shown use mounting styles JB or JJ.

Style J – Dimensional and Mounting Data

Bore Ø	Rod No.	MM Rod Ø	E	EE		F	FB Ø	G	J	K Max.	R	TF	UF	W	WF	Y	Add Stroke		
				NPTF[1]	SAE[2]												LB	P	ZB Max.
7.00	1 (std.)	3.000	8.50	1 1/4	20	1.00	1.19	2.75	2.75	1.16	6.58	10.63	12.63	1.25	2.25	3.69	9.50	5.63	12.16
	2	5.000	8.50	1 1/4	20	1.00	1.19	2.75	2.75	1.16	6.58	10.63	12.63	1.25	2.25	3.69	9.50	5.63	12.16
	3	3.500	8.50	1 1/4	20	1.00	1.19	2.75	2.75	1.16	6.58	10.63	12.63	1.25	2.25	3.69	9.50	5.63	12.16
	4	4.000	8.50	1 1/4	20	1.00	1.19	2.75	2.75	1.16	6.58	10.63	12.63	1.25	2.25	3.69	9.50	5.63	12.16
	5	4.500	8.50	1 1/4	20	1.00	1.19	2.75	2.75	1.16	6.58	10.63	12.63	1.25	2.25	3.69	9.50	5.63	12.16
8.00	1 (std.)	3.500	9.50	1 1/2	24	1.00	1.31	3.00	3.00	1.28	7.50	11.81	14.00	1.25	2.25	3.81	10.50	6.38	13.28
	2	5.500	9.50	1 1/2	24	1.00	1.31	3.00	3.00	1.28	7.50	11.81	14.00	1.25	2.25	3.81	10.50	6.38	13.28
	3	4.000	9.50	1 1/2	24	1.00	1.31	3.00	3.00	1.28	7.50	11.81	14.00	1.25	2.25	3.81	10.50	6.38	13.28
	4	4.500	9.50	1 1/2	24	1.00	1.31	3.00	3.00	1.28	7.50	11.81	14.00	1.25	2.25	3.81	10.50	6.38	13.28
	5	5.000	9.50	1 1/2	24	1.00	1.31	3.00	3.00	1.28	7.50	11.81	14.00	1.25	2.25	3.81	10.50	6.38	13.28

[1]NPTF ports are available at no extra charge.
[2]SAE straight thread ports are standard and are indicated by port number.

Style J – Maximum Operating Pressure / 3H

Bore Ø	Max. psi Push[3]				
	Rod Code				
	1	2	3	4	5
7.00	1400	800	1200	1100	1000
8.00	1100	800	1000	1000	800

[3]Maximum pressure rating – push application.

⚠**PROP 65 WARNING** **WARNING:** This product can expose you to chemicals including **Lead and Lead Compounds** which are known to the State of California to cause cancer and birth defects or other reproductive harm. For more information go to www.P65Warnings.ca.gov

Head Square Flange Mounting

Style JB
(NFPA Style MF5)

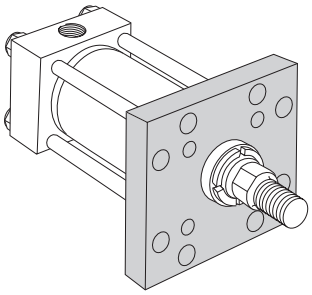

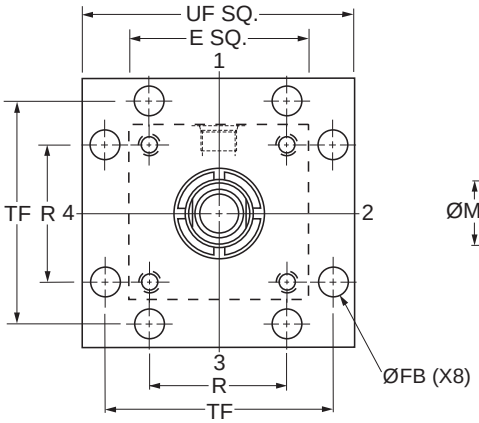

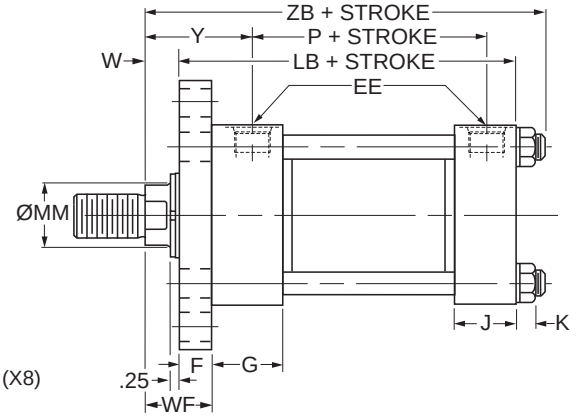

Style JB – Dimensional and Mounting Data

Bore Ø	Rod No.	MM Rod Ø	E	EE		F	FB Ø	G	J	K Max.	R	TF	UF	W	WF	Y	Add Stroke		
				NPTF[1]	SAE[2]												LB	P	ZB Max.
7.00	1 (std.)	3.000	8.50	1 1/4	20	1.00	1.19	2.75	2.75	1.16	6.58	10.63	12.63	1.25	2.25	3.69	9.50	5.63	12.16
	2	5.000	8.50	1 1/4	20	1.00	1.19	2.75	2.75	1.16	6.58	10.63	12.63	1.25	2.25	3.69	9.50	5.63	12.16
	3	3.500	8.50	1 1/4	20	1.00	1.19	2.75	2.75	1.16	6.58	10.63	12.63	1.25	2.25	3.69	9.50	5.63	12.16
	4	4.000	8.50	1 1/4	20	1.00	1.19	2.75	2.75	1.16	6.58	10.63	12.63	1.25	2.25	3.69	9.50	5.63	12.16
	5	4.500	8.50	1 1/4	20	1.00	1.19	2.75	2.75	1.16	6.58	10.63	12.63	1.25	2.25	3.69	9.50	5.63	12.16
8.00	1 (std.)	3.500	9.50	1 1/2	24	1.00	1.31	3.00	3.00	1.28	7.50	11.81	14.00	1.25	2.25	3.81	10.50	6.38	13.28
	2	5.500	9.50	1 1/2	24	1.00	1.31	3.00	3.00	1.28	7.50	11.81	14.00	1.25	2.25	3.81	10.50	6.38	13.28
	3	4.000	9.50	1 1/2	24	1.00	1.31	3.00	3.00	1.28	7.50	11.81	14.00	1.25	2.25	3.81	10.50	6.38	13.28
	4	4.500	9.50	1 1/2	24	1.00	1.31	3.00	3.00	1.28	7.50	11.81	14.00	1.25	2.25	3.81	10.50	6.38	13.28
	5	5.000	9.50	1 1/2	24	1.00	1.31	3.00	3.00	1.28	7.50	11.81	14.00	1.25	2.25	3.81	10.50	6.38	13.28

[1]NPTF ports are available at no extra charge.
[2]SAE straight thread ports are standard and are indicated by port number.

Style JB – Maximum Operating Pressure / 3H

Bore Ø	Max. psi Push[3]				
	Rod Code				
	1	2	3	4	5
7.00	3000	2700	3000	3000	3000
8.00	3000	2300	2500	2500	2500

[3]Maximum pressure rating – push application.

⚠**PROP 65 WARNING** **WARNING:** This product can expose you to chemicals including **Lead and Lead Compounds** which are known to the State of California to cause cancer and birth defects or other reproductive harm. For more information go to www.P65Warnings.ca.gov

Head Rectangular Mounting
Style JJ
(NFPA Style ME5)

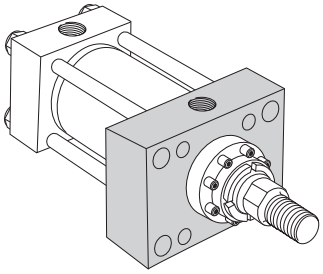

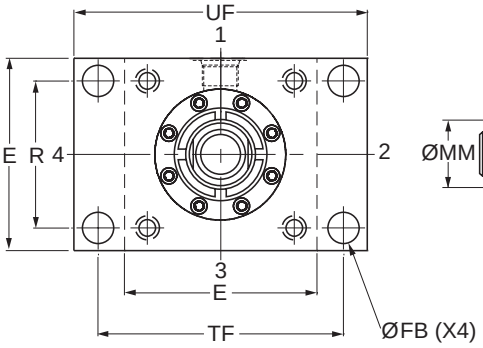

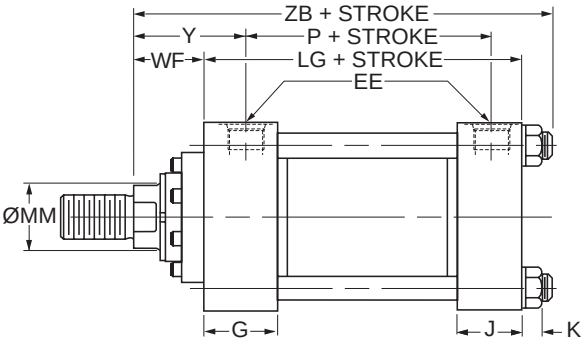

Style JJ – Dimensional and Mounting Data

Bore Ø	Rod No.	MM Rod Ø	E	EE		FB Ø	G	J	K Max.	R	TF	UF	WF	Y	Add Stroke		
				NPTF[1]	SAE[2]										LG	P	ZB Max.
7.00	1 (std.)	3.000	8.50	1 1/4	20	1.19	2.75	2.75	1.16	6.58	10.63	12.63	2.25	3.69	8.50	5.63	12.16
	2	5.000	8.50	1 1/4	20	1.19	2.75	2.75	1.16	6.58	10.63	12.63	2.25	3.69	8.50	5.63	12.16
	3	3.500	8.50	1 1/4	20	1.19	2.75	2.75	1.16	6.58	10.63	12.63	2.25	3.69	8.50	5.63	12.16
	4	4.000	8.50	1 1/4	20	1.19	2.75	2.75	1.16	6.58	10.63	12.63	2.25	3.69	8.50	5.63	12.16
	5	4.500	8.50	1 1/4	20	1.19	2.75	2.75	1.16	6.58	10.63	12.63	2.25	3.69	8.50	5.63	12.16
8.00	1 (std.)	3.500	9.50	1 1/2	24	1.31	3.00	3.00	1.28	7.50	11.81	14.00	2.25	3.81	9.50	6.38	13.28
	2	5.500	9.50	1 1/2	24	1.31	3.00	3.00	1.28	7.50	11.81	14.00	2.25	3.81	9.50	6.38	13.28
	3	4.000	9.50	1 1/2	24	1.31	3.00	3.00	1.28	7.50	11.81	14.00	2.25	3.81	9.50	6.38	13.28
	4	4.500	9.50	1 1/2	24	1.31	3.00	3.00	1.28	7.50	11.81	14.00	2.25	3.81	9.50	6.38	13.28
	5	5.000	9.50	1 1/2	24	1.31	3.00	3.00	1.28	7.50	11.81	14.00	2.25	3.81	9.50	6.38	13.28

[1]NPTF ports are available at no extra charge.
[2]SAE straight thread ports are standard and are indicated by port number.

⚠**PROP 65 WARNING** **WARNING:** This product can expose you to chemicals including **Lead and Lead Compounds** which are known to the State of California to cause cancer and birth defects or other reproductive harm. For more information go to www.P65Warnings.ca.gov

Cap Rectangular Flange Mounting
Style H
(NFPA Style MF2)

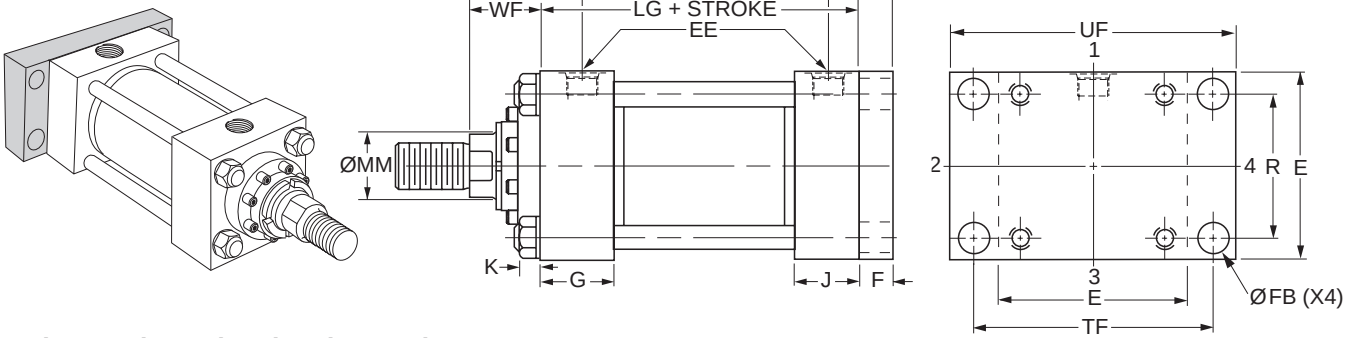

Style H – Dimensional and Mounting Data

Bore Ø	Rod No.	MM Rod Ø	E	EE		F	FB Ø	G	J	K Max.	R	TF	UF	WF	Y	Add Stroke			
				NPTF[1]	SAE[2]											LG	P	XF	ZF
7.00	1 (std.)	3.000	8.50	1 1/4	20	1.00	1.19	2.75	2.75	1.16	6.58	10.63	12.63	2.25	3.69	8.50	5.63	10.75	11.75
	2	5.000	8.50	1 1/4	20	1.00	1.19	2.75	2.75	1.16	6.58	10.63	12.63	2.25	3.69	8.50	5.63	10.75	11.75
	3	3.500	8.50	1 1/4	20	1.00	1.19	2.75	2.75	1.16	6.58	10.63	12.63	2.25	3.69	8.50	5.63	10.75	11.75
	4	4.000	8.50	1 1/4	20	1.00	1.19	2.75	2.75	1.16	6.58	10.63	12.63	2.25	3.69	8.50	5.63	10.75	11.75
	5	4.500	8.50	1 1/4	20	1.00	1.19	2.75	2.75	1.16	6.58	10.63	12.63	2.25	3.69	8.50	5.63	10.75	11.75
8.00	1 (std.)	3.500	9.50	1 1/2	24	1.00	1.31	3.00	3.00	1.28	7.50	11.81	14.00	2.25	3.81	9.50	6.38	11.75	12.75
	2	5.500	9.50	1 1/2	24	1.00	1.31	3.00	3.00	1.28	7.50	11.81	14.00	2.25	3.81	9.50	6.38	11.75	12.75
	3	4.000	9.50	1 1/2	24	1.00	1.31	3.00	3.00	1.28	7.50	11.81	14.00	2.25	3.81	9.50	6.38	11.75	12.75
	4	4.500	9.50	1 1/2	24	1.00	1.31	3.00	3.00	1.28	7.50	11.81	14.00	2.25	3.81	9.50	6.38	11.75	12.75
	5	5.000	9.50	1 1/2	24	1.00	1.31	3.00	3.00	1.28	7.50	11.81	14.00	2.25	3.81	9.50	6.38	11.75	12.75

[1]NPTF ports are available at no extra charge.
[2]SAE straight thread ports are standard and are indicated by port number.

Style H – Maximum Operating Pressure / 3H

Bore Ø	Max. psi Pull[3]				
	Rod Code				
	1	2	3	4	5
7.00	2000	3000	2000	2500	2800
8.00	1700	2500	1700	1800	2200

[3]Maximum pressure rating – pull application.

⚠**PROP 65 WARNING** **WARNING:** This product can expose you to chemicals including **Lead and Lead Compounds** which are known to the State of California to cause cancer and birth defects or other reproductive harm. For more information go to www.P65Warnings.ca.gov

Cap Square Flange Mounting
Style HB
(NFPA Style MF6)

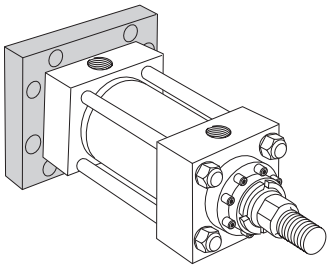

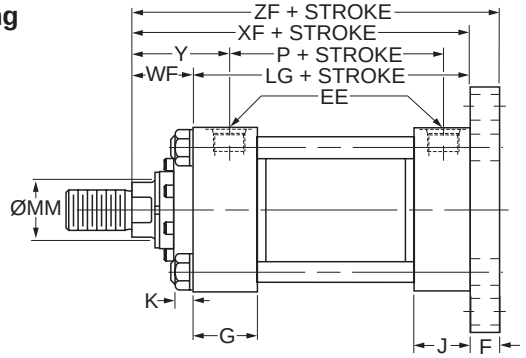

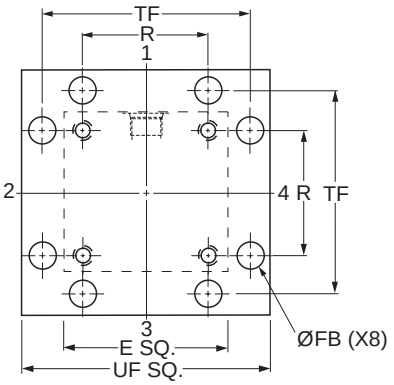

Style HB – Dimensional and Mounting Data

Bore Ø	Rod No.	MM Rod Ø	E	EE		F	FB Ø	G	J	K Max.	R	TF	UF	WF	Y	Add Stroke			
				NPTF[1]	SAE[2]											LG	P	XF	ZF
7.00	1 (std.)	3.000	8.50	1 1/4	20	1.00	1.19	2.75	2.75	1.16	6.58	10.63	12.63	2.25	3.69	8.50	5.63	10.75	11.75
	2	5.000	8.50	1 1/4	20	1.00	1.19	2.75	2.75	1.16	6.58	10.63	12.63	2.25	3.69	8.50	5.63	10.75	11.75
	3	3.500	8.50	1 1/4	20	1.00	1.19	2.75	2.75	1.16	6.58	10.63	12.63	2.25	3.69	8.50	5.63	10.75	11.75
	4	4.000	8.50	1 1/4	20	1.00	1.19	2.75	2.75	1.16	6.58	10.63	12.63	2.25	3.69	8.50	5.63	10.75	11.75
	5	4.500	8.50	1 1/4	20	1.00	1.19	2.75	2.75	1.16	6.58	10.63	12.63	2.25	3.69	8.50	5.63	10.75	11.75
8.00	1 (std.)	3.500	9.50	1 1/2	24	1.00	1.31	3.00	3.00	1.28	7.50	11.81	14.00	2.25	3.81	9.50	6.38	11.75	12.75
	2	5.500	9.50	1 1/2	24	1.00	1.31	3.00	3.00	1.28	7.50	11.81	14.00	2.25	3.81	9.50	6.38	11.75	12.75
	3	4.000	9.50	1 1/2	24	1.00	1.31	3.00	3.00	1.28	7.50	11.81	14.00	2.25	3.81	9.50	6.38	11.75	12.75
	4	4.500	9.50	1 1/2	24	1.00	1.31	3.00	3.00	1.28	7.50	11.81	14.00	2.25	3.81	9.50	6.38	11.75	12.75
	5	5.000	9.50	1 1/2	24	1.00	1.31	3.00	3.00	1.28	7.50	11.81	14.00	2.25	3.81	9.50	6.38	11.75	12.75

[1]NPTF ports are available at no extra charge.
[2]SAE straight thread ports are standard and are indicated by port number.

Cap Rectangular Mounting
Style HH
(NFPA Style ME6)

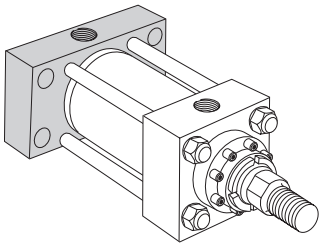

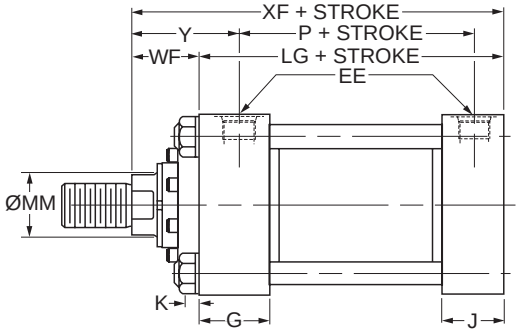

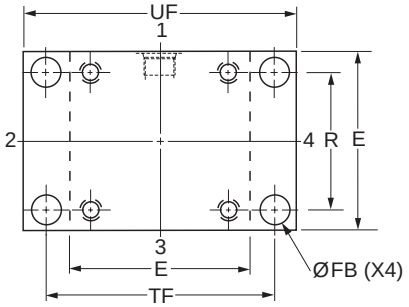

Style HH – Dimensional and Mounting Data

Bore Ø	Rod No	MM Rod Ø	E	EE		FB Ø	G	J	K Max.	R	TF	UF	WF	Y	Add Stroke		
				NPTF[1]	SAE[2]										LG	P	XF
7.00	1 (std.)	3.000	8.50	1 1/4	20	1.19	2.75	2.75	1.16	6.58	10.63	12.63	2.25	3.69	8.50	5.63	10.75
	2	5.000	8.50	1 1/4	20	1.19	2.75	2.75	1.16	6.58	10.63	12.63	2.25	3.69	8.50	5.63	10.75
	3	3.500	8.50	1 1/4	20	1.19	2.75	2.75	1.16	6.58	10.63	12.63	2.25	3.69	8.50	5.63	10.75
	4	4.000	8.50	1 1/4	20	1.19	2.75	2.75	1.16	6.58	10.63	12.63	2.25	3.69	8.50	5.63	10.75
	5	4.500	8.50	1 1/4	20	1.19	2.75	2.75	1.16	6.58	10.63	12.63	2.25	3.69	8.50	5.63	10.75
8.00	1 (std.)	3.500	9.50	1 1/2	24	1.31	3.00	3.00	1.28	7.50	11.81	14.00	2.25	3.81	9.50	6.38	11.75
	2	5.500	9.50	1 1/2	24	1.31	3.00	3.00	1.28	7.50	11.81	14.00	2.25	3.81	9.50	6.38	11.75
	3	4.000	9.50	1 1/2	24	1.31	3.00	3.00	1.28	7.50	11.81	14.00	2.25	3.81	9.50	6.38	11.75
	4	4.500	9.50	1 1/2	24	1.31	3.00	3.00	1.28	7.50	11.81	14.00	2.25	3.81	9.50	6.38	11.75
	5	5.000	9.50	1 1/2	24	1.31	3.00	3.00	1.28	7.50	11.81	14.00	2.25	3.81	9.50	6.38	11.75

[1]NPTF ports are available at no extra charge.
[2]SAE straight thread ports are standard and are indicated by port number.

⚠PROP 65 WARNING **WARNING:** This product can expose you to chemicals including **Lead and Lead Compounds** which are known to the State of California to cause cancer and birth defects or other reproductive harm. For more information go to www.P65Warnings.ca.gov

Side Lug Mounting
Style C
(NFPA Style MS2)

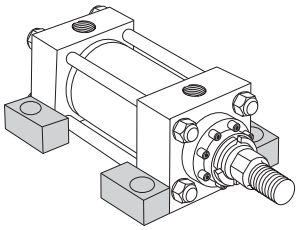

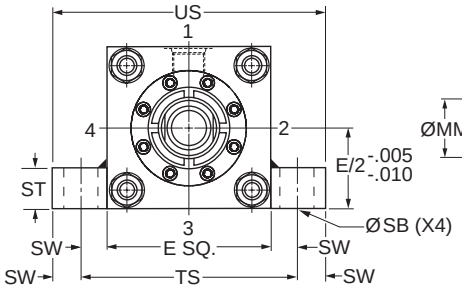

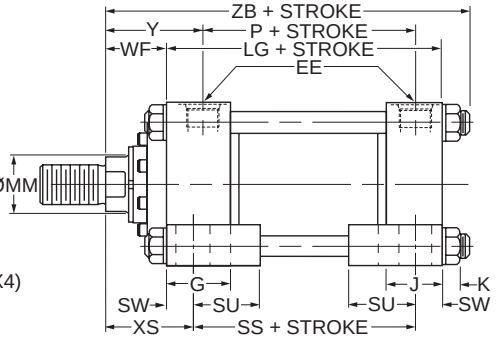

Style C – Dimensional and Mounting Data

Bore Ø	Rod No.	MM Rod Ø	E	EE		G	J	K Max.	SB Ø	ST	SU	SW	TS	US	WF	XS	Y	Add Stroke			
				NPTF[1]	SAE[2]													LG	P	SS	ZB Max.
7.00	1 (std.)	3.000	8.50	1 1/4	20	2.75	2.75	1.16	1.56	1.75	2.88	1.38	11.25	14.00	2.25	3.63	3.69	8.50	5.63	5.75	12.16
	2	5.000	8.50	1 1/4	20	2.75	2.75	1.16	1.56	1.75	2.88	1.38	11.25	14.00	2.25	3.63	3.69	8.50	5.63	5.75	12.16
	3	3.500	8.50	1 1/4	20	2.75	2.75	1.16	1.56	1.75	2.88	1.38	11.25	14.00	2.25	3.63	3.69	8.50	5.63	5.75	12.16
	4	4.000	8.50	1 1/4	20	2.75	2.75	1.16	1.56	1.75	2.88	1.38	11.25	14.00	2.25	3.63	3.69	8.50	5.63	5.75	12.16
	5	4.500	8.50	1 1/4	20	2.75	2.75	1.16	1.56	1.75	2.88	1.38	11.25	14.00	2.25	3.63	3.69	8.50	5.63	5.75	12.16
8.00	1 (std.)	3.500	9.50	1 1/2	24	3.00	3.00	1.28	1.56	1.75	2.88	1.38	12.25	15.00	2.25	3.63	3.81	9.50	6.38	6.75	13.28
	2	5.500	9.50	1 1/2	24	3.00	3.00	1.28	1.56	1.75	2.88	1.38	12.25	15.00	2.25	3.63	3.81	9.50	6.38	6.75	13.28
	3	4.000	9.50	1 1/2	24	3.00	3.00	1.28	1.56	1.75	2.88	1.38	12.25	15.00	2.25	3.63	3.81	9.50	6.38	6.75	13.28
	4	4.500	9.50	1 1/2	24	3.00	3.00	1.28	1.56	1.75	2.88	1.38	12.25	15.00	2.25	3.63	3.81	9.50	6.38	6.75	13.28
	5	5.000	9.50	1 1/2	24	3.00	3.00	1.28	1.56	1.75	2.88	1.38	12.25	15.00	2.25	3.63	3.81	9.50	6.38	6.75	13.28

[1]NPTF ports are available at no extra charge. [2]SAE straight thread ports are standard and are indicated by port number.

Side Tapped Mounting
Style F
(NFPA Style MS4)

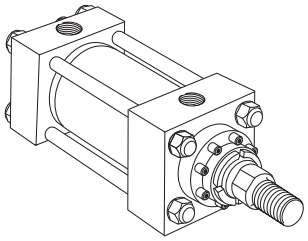

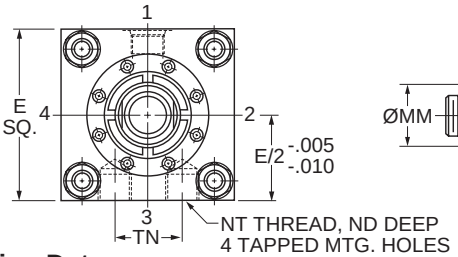

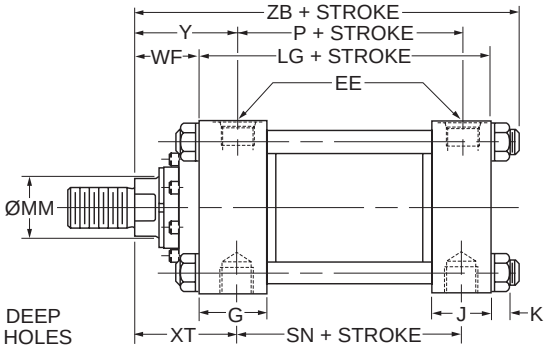

Style F – Dimensional and Mounting Data

Bore Ø	Rod No.	MM Rod Ø	E	EE		G	J	K Max.	ND	NT	TN	WF	XT	Y	Add Stroke			
				NPTF[1]	SAE[2]										LG	P	SN	ZB Max.
7.00	1 (std.)	3.000	8.50	1 1/4	20	2.75	2.75	1.16	1.13	1 1/2-6	3.75	2.25	3.81	3.69	8.50	5.63	5.88	12.16
	2	5.000	8.50	1 1/4	20	2.75	2.75	1.16	1.13	1 1/2-6	3.75	2.25	3.81	3.69	8.50	5.63	5.88	12.16
	3	3.500	8.50	1 1/4	20	2.75	2.75	1.16	1.13	1 1/2-6	3.75	2.25	3.81	3.69	8.50	5.63	5.88	12.16
	4	4.000	8.50	1 1/4	20	2.75	2.75	1.16	1.13	1 1/2-6	3.75	2.25	3.81	3.69	8.50	5.63	5.88	12.16
	5	4.500	8.50	1 1/4	20	2.75	2.75	1.16	1.13	1 1/2-6	3.75	2.25	3.81	3.69	8.50	5.63	5.88	12.16
8.00	1 (std.)	3.500	9.50	1 1/2	24	3.00	3.00	1.28	1.50	1 1/2-6	4.25	2.25	3.94	3.81	9.50	6.38	6.63	13.28
	2	5.500	9.50	1 1/2	24	3.00	3.00	1.28	1.50	1 1/2-6	4.25	2.25	3.94	3.81	9.50	6.38	6.63	13.28
	3	4.000	9.50	1 1/2	24	3.00	3.00	1.28	1.50	1 1/2-6	4.25	2.25	3.94	3.81	9.50	6.38	6.63	13.28
	4	4.500	9.50	1 1/2	24	3.00	3.00	1.28	1.50	1 1/2-6	4.25	2.25	3.94	3.81	9.50	6.38	6.63	13.28
	5	5.000	9.50	1 1/2	24	3.00	3.00	1.28	1.50	1 1/2-6	4.25	2.25	3.94	3.81	9.50	6.38	6.63	13.28

[1]NPTF ports are available at no extra charge. [2]SAE straight thread ports are standard and are indicated by port number.

⚠PROP 65 WARNING **WARNING:** This product can expose you to chemicals including **Lead and Lead Compounds** which are known to the State of California to cause cancer and birth defects or other reproductive harm. For more information go to www.P65Warnings.ca.gov

Cap Fixed Clevis Mounting
Style BB
(NFPA Style MP1)

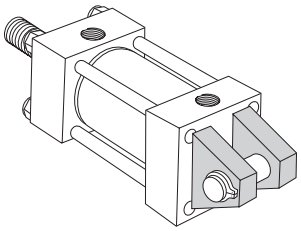

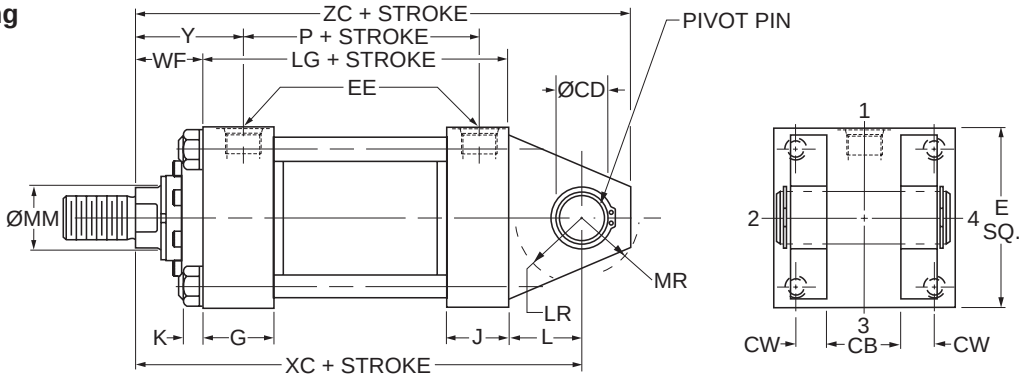

Style BB – Dimensional and Mounting Data

Bore Ø	Rod No.	MM Rod Ø	CB	CD[3] Ø +.000 -.002	CW	E	EE		G	J	K Max.	L	LR	MR
							NPTF[1]	SAE[2]						
7.00	1 (std.)	3.000	3.00	2.501	1.50	8.50	1 1/4	20	2.75	2.75	1.16	3.00	2.75	2.88
	2	5.000	3.00	2.501	1.50	8.50	1 1/4	20	2.75	2.75	1.16	3.00	2.75	2.88
	3	3.500	3.00	2.501	1.50	8.50	1 1/4	20	2.75	2.75	1.16	3.00	2.75	2.88
	4	4.000	3.00	2.501	1.50	8.50	1 1/4	20	2.75	2.75	1.16	3.00	2.75	2.88
	5	4.500	3.00	2.501	1.50	8.50	1 1/4	20	2.75	2.75	1.16	3.00	2.75	2.88
8.00	1 (std.)	3.500	3.00	3.001	1.50	9.50	1 1/2	24	3.00	3.00	1.28	3.25	3.25	3.13
	2	5.500	3.00	3.001	1.50	9.50	1 1/2	24	3.00	3.00	1.28	3.25	3.25	3.13
	3	4.000	3.00	3.001	1.50	9.50	1 1/2	24	3.00	3.00	1.28	3.25	3.25	3.13
	4	4.500	3.00	3.001	1.50	9.50	1 1/2	24	3.00	3.00	1.28	3.25	3.25	3.13
	5	5.000	3.00	3.001	1.50	9.50	1 1/2	24	3.00	3.00	1.28	3.25	3.25	3.13

[1]NPTF ports are available at no extra charge.
[2]SAE straight thread ports are standard and are indicated by port number.
[3]Diameter CD is pin diameter.

Style BB – Dimensional and Mounting Data

Bore Ø	Rod No.	MM Rod Ø	WF	Y	Add Stroke			
					LG	P	XC	ZC
7.00	1 (std.)	3.000	2.25	3.69	8.50	5.63	13.75	16.25
	2	5.000	2.25	3.69	8.50	5.63	13.75	16.25
	3	3.500	2.25	3.69	8.50	5.63	13.75	16.25
	4	4.000	2.25	3.69	8.50	5.63	13.75	16.25
	5	4.500	2.25	3.69	8.50	5.63	13.75	16.25
8.00	1 (std.)	3.500	2.25	3.81	9.50	6.38	15.00	17.75
	2	5.500	2.25	3.81	9.50	6.38	15.00	17.75
	3	4.000	2.25	3.81	9.50	6.38	15.00	17.75
	4	4.500	2.25	3.81	9.50	6.38	15.00	17.75
	5	5.000	2.25	3.81	9.50	6.38	15.00	17.75

⚠**PROP 65 WARNING** **WARNING:** This product can expose you to chemicals including **Lead and Lead Compounds** which are known to the State of California to cause cancer and birth defects or other reproductive harm. For more information go to www.P65Warnings.ca.gov

Head Trunnion Mounting
Style D
(NFPA Style MT1)

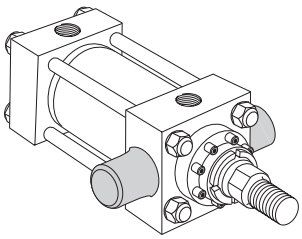

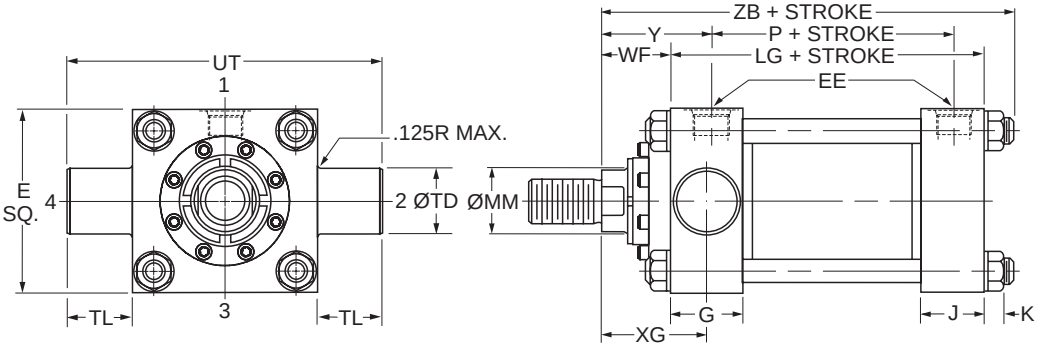

Style D – Dimensional and Mounting Data

Bore Ø	Rod No.	MM Rod Ø	E	EE		G	J	K Max.	TD Ø +.000 -.002	TL	UT	WF	Y	XG
				NPTF[1]	SAE[2]									
7.00	1 (std.)	3.000	8.50	1 1/4	20	2.75	2.75	1.16	2.500	2.50	13.50	2.25	3.69	3.63
	2	5.000	8.50	1 1/4	20	2.75	2.75	1.16	2.500	2.50	13.50	2.25	3.69	3.63
	3	3.500	8.50	1 1/4	20	2.75	2.75	1.16	2.500	2.50	13.50	2.25	3.69	3.63
	4	4.000	8.50	1 1/4	20	2.75	2.75	1.16	2.500	2.50	13.50	2.25	3.69	3.63
	5	4.500	8.50	1 1/4	20	2.75	2.75	1.16	2.500	2.50	13.50	2.25	3.69	3.63
8.00	1 (std.)	3.500	9.50	1 1/2	24	3.00	3.00	1.28	3.000	3.00	15.50	2.25	3.81	3.75
	2	5.500	9.50	1 1/2	24	3.00	3.00	1.28	3.000	3.00	15.50	2.25	3.81	3.75
	3	4.000	9.50	1 1/2	24	3.00	3.00	1.28	3.000	3.00	15.50	2.25	3.81	3.75
	4	4.500	9.50	1 1/2	24	3.00	3.00	1.28	3.000	3.00	15.50	2.25	3.81	3.75
	5	5.000	9.50	1 1/2	24	3.00	3.00	1.28	3.000	3.00	15.50	2.25	3.81	3.75

[1]NPTF ports are available at no extra charge.
[2]SAE straight thread ports are standard and are indicated by port number.

Style D – Dimensional and Mounting Data

Bore Ø	Rod No.	MM Rod Ø	Add Stroke		
			LG	P	ZB Max.
7.00	1 (std.)	3.000	8.50	5.63	12.16
	2	5.000	8.50	5.63	12.16
	3	3.500	8.50	5.63	12.16
	4	4.000	8.50	5.63	12.16
	5	4.500	8.50	5.63	12.16
8.00	1 (std.)	3.500	9.50	6.38	13.28
	2	5.500	9.50	6.38	13.28
	3	4.000	9.50	6.38	13.28
	4	4.500	9.50	6.38	13.28
	5	5.000	9.50	6.38	13.28

⚠**PROP 65 WARNING** **WARNING:** This product can expose you to chemicals including **Lead and Lead Compounds** which are known to the State of California to cause cancer and birth defects or other reproductive harm. For more information go to www.P65Warnings.ca.gov

Cap Trunnion Mounting
Style DB
(NFPA Style MT2)

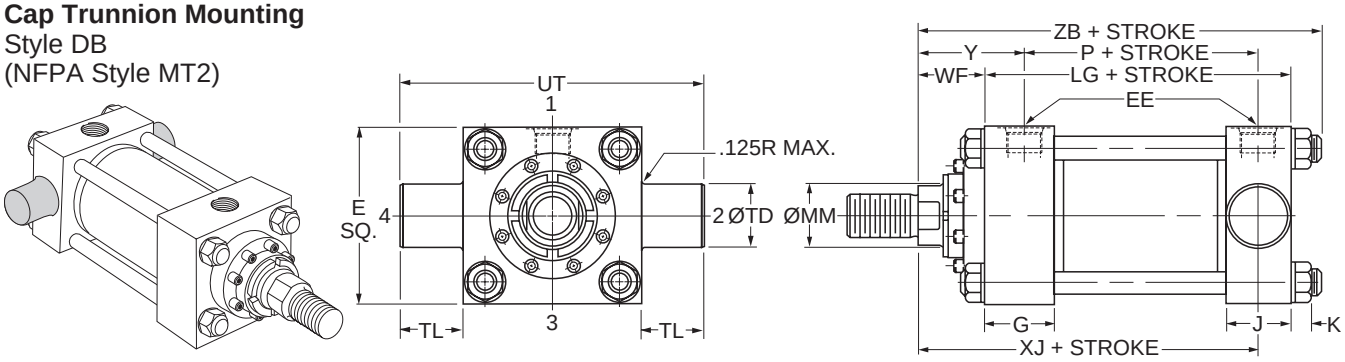

Style DB – Dimensional and Mounting Data

Bore Ø	Rod No.	MM Rod Ø	E	EE		G	J	K Max.	TD Ø +.000 -.002	TL	UT	WF	Y
				NPTF[1]	SAE[2]								
7.00	1 (std.)	3.000	8.50	1 1/4	20	2.75	2.75	1.16	2.500	2.50	13.50	2.25	3.69
	2	5.000	8.50	1 1/4	20	2.75	2.75	1.16	2.500	2.50	13.50	2.25	3.69
	3	3.500	8.50	1 1/4	20	2.75	2.75	1.16	2.500	2.50	13.50	2.25	3.69
	4	4.000	8.50	1 1/4	20	2.75	2.75	1.16	2.500	2.50	13.50	2.25	3.69
	5	4.500	8.50	1 1/4	20	2.75	2.75	1.16	2.500	2.50	13.50	2.25	3.69
8.00	1 (std.)	3.500	9.50	1 1/2	24	3.00	3.00	1.28	3.000	3.00	15.50	2.25	3.81
	2	5.500	9.50	1 1/2	24	3.00	3.00	1.28	3.000	3.00	15.50	2.25	3.81
	3	4.000	9.50	1 1/2	24	3.00	3.00	1.28	3.000	3.00	15.50	2.25	3.81
	4	4.500	9.50	1 1/2	24	3.00	3.00	1.28	3.000	3.00	15.50	2.25	3.81
	5	5.000	9.50	1 1/2	24	3.00	3.00	1.28	3.000	3.00	15.50	2.25	3.81

[1]NPTF ports are available at no extra charge.
[2]SAE straight thread ports are standard and are indicated by port number.

Style DB – Dimensional and Mounting Data

Bore Ø	Rod No.	MM Rod Ø	Add Stroke			
			LG	P	XJ	ZB Max
7.00	1 (std.)	3.000	8.50	5.63	9.38	12.16
	2	5.000	8.50	5.63	9.38	12.16
	3	3.500	8.50	5.63	9.38	12.16
	4	4.000	8.50	5.63	9.38	12.16
	5	4.500	8.50	5.63	9.38	12.16
8.00	1 (std.)	3.500	9.50	6.38	10.25	13.28
	2	5.500	9.50	6.38	10.25	13.28
	3	4.000	9.50	6.38	10.25	13.28
	4	4.500	9.50	6.38	10.25	13.28
	5	5.000	9.50	6.38	10.25	13.28

⚠**PROP 65 WARNING** **WARNING:** This product can expose you to chemicals including **Lead and Lead Compounds** which are known to the State of California to cause cancer and birth defects or other reproductive harm. For more information go to www.P65Warnings.ca.gov

Intermediate Fixed Trunnion Mounting
Style DD
(NFPA Former Standard Style MT4)

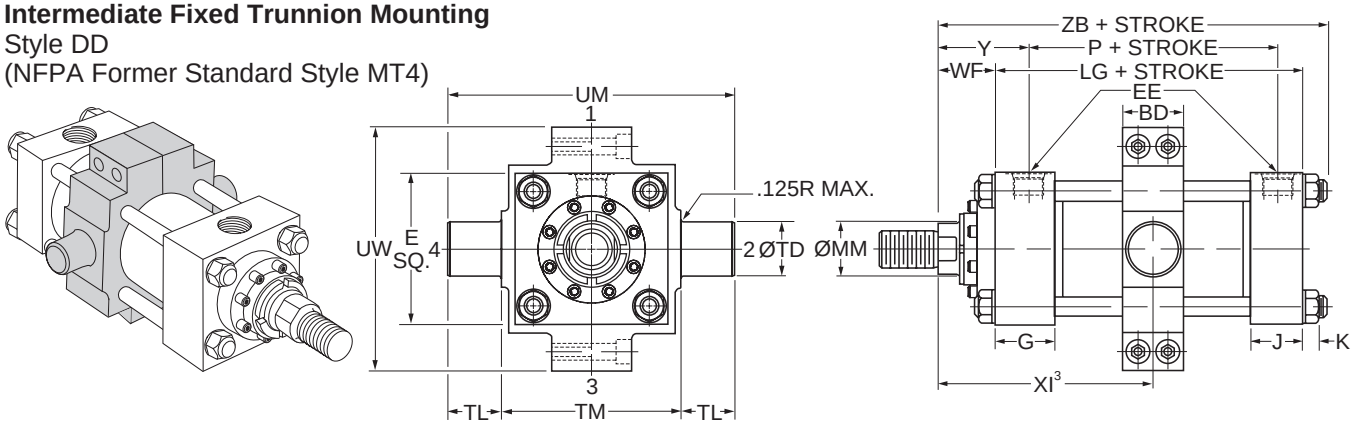

Style DD – Dimensional and Mounting Data

Bore Ø	Rod No.	MM Rod Ø	BD	E	EE		G	J	K Max.	TD Ø +.000 -.002	TL	TM	UM	UW	WF	Y
					NPTF[1]	SAE[2]										
7.00	1 (std.)	3.000	3.00	8.50	1 1/4	20	2.75	2.75	1.16	2.500	2.50	9.75	14.75	11.50	2.25	3.69
	2	5.000	3.00	8.50	1 1/4	20	2.75	2.75	1.16	2.500	2.50	9.75	14.75	11.50	2.25	3.69
	3	3.500	3.00	8.50	1 1/4	20	2.75	2.75	1.16	2.500	2.50	9.75	14.75	11.50	2.25	3.69
	4	4.000	3.00	8.50	1 1/4	20	2.75	2.75	1.16	2.500	2.50	9.75	14.75	11.50	2.25	3.69
	5	4.500	3.00	8.50	1 1/4	20	2.75	2.75	1.16	2.500	2.50	9.75	14.75	11.50	2.25	3.69
8.00	1 (std.)	3.500	3.50	9.50	1 1/2	24	3.00	3.00	1.28	3.000	3.00	11.00	17.00	13.38	2.25	3.81
	2	5.500	3.50	9.50	1 1/2	24	3.00	3.00	1.28	3.000	3.00	11.00	17.00	13.38	2.25	3.81
	3	4.000	3.50	9.50	1 1/2	24	3.00	3.00	1.28	3.000	3.00	11.00	17.00	13.38	2.25	3.81
	4	4.500	3.50	9.50	1 1/2	24	3.00	3.00	1.28	3.000	3.00	11.00	17.00	13.38	2.25	3.81
	5	5.000	3.50	9.50	1 1/2	24	3.00	3.00	1.28	3.000	3.00	11.00	17.00	13.38	2.25	3.81

[1]NPTF ports are available at no extra charge.
[2]SAE straight thread ports are standard and are indicated by port number.

Style DD – Dimensional and Mounting Data

Bore Ø	Rod No.	MM Rod Ø	Style DD Minimum Stroke	Minimum XI[3]		Add Stroke				
				Styles 4, 8 & 9	Style 55	LG	P	Maximum XI[4]		ZB Max.
								Styles 4, 8 & 9	Style 55	
7.00	1 (std.)	3.000	0.13	6.56	9.19	8.50	5.63	6.44	9.06	12.16
	2	5.000	0.13	6.56	10.94	8.50	5.63	6.44	10.81	12.16
	3	3.500	0.13	6.56	9.94	8.50	5.63	6.44	9.81	12.16
	4	4.000	0.13	6.56	10.06	8.50	5.63	6.44	9.94	12.16
	5	4.500	0.13	6.56	10.81	8.50	5.63	6.44	10.69	12.16
8.00	1 (std.)	3.500	0.13	7.06	10.44	9.50	6.38	6.94	10.31	13.28
	2	5.500	0.13	7.06	12.31	9.50	6.38	6.94	12.19	13.28
	3	4.000	0.13	7.06	10.56	9.50	6.38	6.94	10.44	13.28
	4	4.500	0.13	7.06	11.31	9.50	6.38	6.94	11.19	13.28
	5	5.000	0.13	7.06	11.44	9.50	6.38	6.94	11.31	13.28

[3]Dimension XI to be specified by customer. Reference point for rod end Style 55 is end of piston rod.
[4]Dimensions shown are valid for standard WF and WG dimension.

⚠**PROP 65 WARNING** **WARNING:** This product can expose you to chemicals including **Lead and Lead Compounds** which are known to the State of California to cause cancer and birth defects or other reproductive harm. For more information go to www.P65Warnings.ca.gov

Heavy Duty Intermediate Fixed Trunnion Mounting
Style DE
(NFPA Current Standard Style MT4)

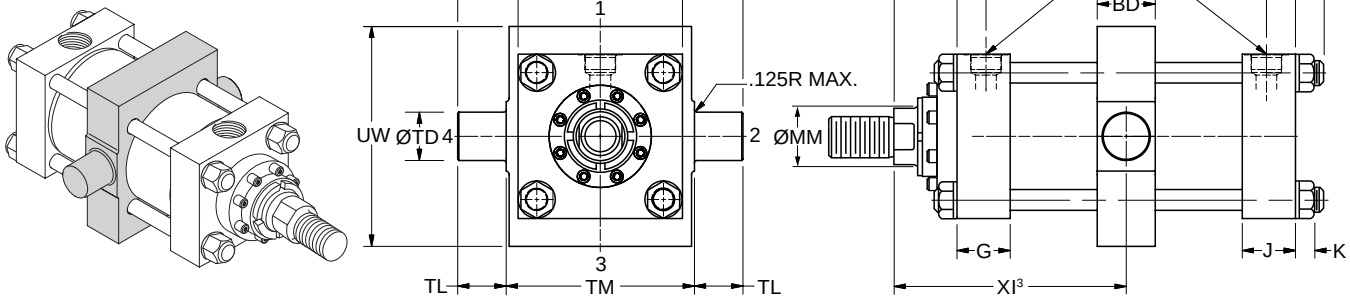

Style DE – Dimensional and Mounting Data

Bore Ø	Rod No.	MM Rod Ø	BD	E	EE		G	J	K Max.	TD Ø +.000 -.002	TL	TM	UM	UW	WF	Y
					NPTF[1]	SAE[2]										
7.00	1 (std.)	3.000	4.000	8.50	1 1/4	20	2.75	2.75	1.16	3.500	2.50	9.75	14.75	11.38	2.25	3.69
	2	5.000	4.000	8.50	1 1/4	20	2.75	2.75	1.16	3.500	2.50	9.75	14.75	11.38	2.25	3.69
	3	3.500	4.000	8.50	1 1/4	20	2.75	2.75	1.16	3.500	2.50	9.75	14.75	11.38	2.25	3.69
	4	4.000	4.000	8.50	1 1/4	20	2.75	2.75	1.16	3.500	2.50	9.75	14.75	11.38	2.25	3.69
	5	4.500	4.000	8.50	1 1/4	20	2.75	2.75	1.16	3.500	2.50	9.75	14.75	11.38	2.25	3.69
8.00	1 (std.)	3.500	4.500	9.50	1 1/2	24	3.00	3.00	1.28	4.000	3.00	11.00	17.00	12.00	2.25	3.81
	2	5.500	4.500	9.50	1 1/2	24	3.00	3.00	1.28	4.000	3.00	11.00	17.00	12.00	2.25	3.81
	3	4.000	4.500	9.50	1 1/2	24	3.00	3.00	1.28	4.000	3.00	11.00	17.00	12.00	2.25	3.81
	4	4.500	4.500	9.50	1 1/2	24	3.00	3.00	1.28	4.000	3.00	11.00	17.00	12.00	2.25	3.81
	5	5.000	4.500	9.50	1 1/2	24	3.00	3.00	1.28	4.000	3.00	11.00	17.00	12.00	2.25	3.81

[1]NPTF ports are available at no extra charge.
[2]SAE straight thread ports are standard and are indicated by port number.

Style DE – Dimensional and Mounting Data

Bore Ø	Rod No.	MM Rod Ø	Style DE Minimum Stroke	Minimum XI[3]		Add Stroke				
				Styles 4, 8 & 9	Style 55	LG	P	Maximum XI[4]		ZB Max.
								Styles 4, 8 & 9	Style 55	
7.00	1 (std.)	3.000	1.13	7.06	9.69	8.50	5.63	5.94	8.56	12.16
	2	5.000	1.13	7.06	11.44	8.50	5.63	5.94	10.31	12.16
	3	3.500	1.13	7.06	10.44	8.50	5.63	5.94	9.31	12.16
	4	4.000	1.13	7.06	10.56	8.50	5.63	5.94	9.44	12.16
	5	4.500	1.13	7.06	11.31	8.50	5.63	5.94	10.19	12.16
8.00	1 (std.)	3.500	1.13	7.56	10.94	9.50	6.38	6.44	9.81	13.28
	2	5.500	1.13	7.56	12.81	9.50	6.38	6.44	11.69	13.28
	3	4.000	1.13	7.56	11.06	9.50	6.38	6.44	9.94	13.28
	4	4.500	1.13	7.56	11.81	9.50	6.38	6.44	10.69	13.28
	5	5.000	1.13	7.56	11.94	9.50	6.38	6.44	10.81	13.28

[3]Dimension XI to be specified by customer. Reference point for rod end Style 55 is end of piston rod.
[4]Dimensions shown are valid for standard WF and WG dimension.

⚠**PROP 65 WARNING** **WARNING:** This product can expose you to chemicals including **Lead and Lead Compounds** which are known to the State of California to cause cancer and birth defects or other reproductive harm. For more information go to www.P65Warnings.ca.gov

Spherical Bearing Mounting
Style SE

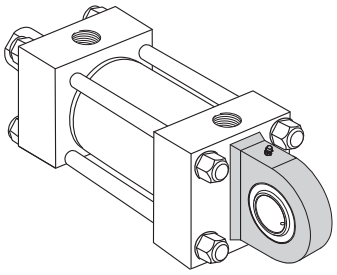

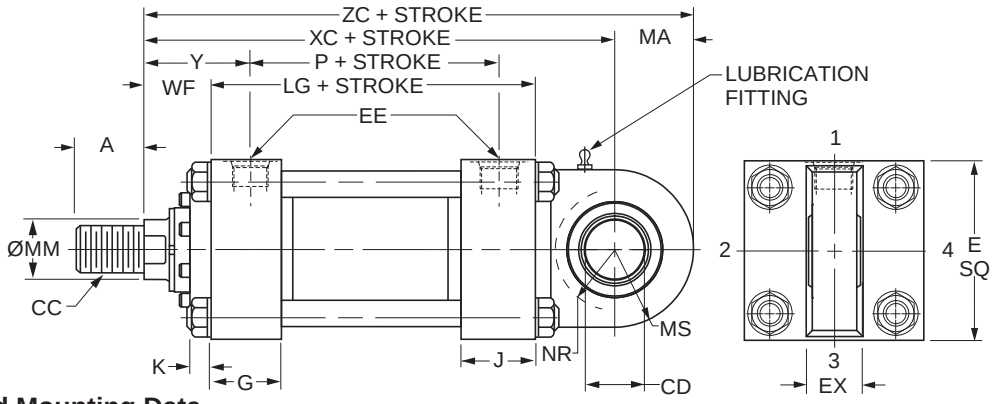

Style SE — Dimensional and Mounting Data

Bore Ø	Rod No.	MM Rod Ø	A	CD[3] Ø +0.0000 -0.0008	E	EX	EE		G	J	K Max.	MS	MA	NR	WF	Y
							NPTF[1]	SAE[2]								
7.00	1 (std.)	3.000	3.50	3.5000	8.50	3.06	1 1/4	20	2.75	2.75	1.16	4.00	4.00	3.68	2.25	3.69
	2	5.000	3.50	3.5000	8.50	3.06	1 1/4	20	2.75	2.75	1.16	4.00	4.00	3.68	2.25	3.69
	3	3.500	3.50	3.5000	8.50	3.06	1 1/4	20	2.75	2.75	1.16	4.00	4.00	3.68	2.25	3.69
	4	4.000	3.50	3.5000	8.50	3.06	1 1/4	20	2.75	2.75	1.16	4.00	4.00	3.68	2.25	3.69
	5	4.500	3.50	3.5000	8.50	3.06	1 1/4	20	2.75	2.75	1.16	4.00	4.00	3.68	2.25	3.69
8.00	1 (std.)	3.500	3.50	4.0000	9.50	3.50	1 1/2	24	3.00	3.00	1.28	4.50	4.50	4.13	2.25	3.81
	2	5.500	3.50	4.0000	9.50	3.50	1 1/2	24	3.00	3.00	1.28	4.50	4.50	4.13	2.25	3.81
	3	4.000	3.50	4.0000	9.50	3.50	1 1/2	24	3.00	3.00	1.28	4.50	4.50	4.13	2.25	3.81
	4	4.500	3.50	4.0000	9.50	3.50	1 1/2	24	3.00	3.00	1.28	4.50	4.50	4.13	2.25	3.81
	5	5.000	3.50	4.0000	9.50	3.50	1 1/2	24	3.00	3.00	1.28	4.50	4.50	4.13	2.25	3.81

[1]NPTF ports are available at no extra charge.
[2]SAE straight thread ports are standard and are indicated by port number.
[3]Dimension CD is pin diameter.

Style SE – Dimensional and Mounting Data

Bore Ø	Rod No.	MM Rod Ø	Thread Style 8 CC[4]	A	Add Stroke LG	P	XC	XL	ZC
7.00	1 (std.)	3.000	2 3/4-12	3.50	8.50	5.63	15.25	23.25	19.25
	2	5.000	[4]	[4]	8.50	5.63	15.25	23.25	19.25
	3	3.500	[4]	[4]	8.50	5.63	15.25	23.25	19.25
	4	4.000	[4]	[4]	8.50	5.63	15.25	23.25	19.25
	5	4.500	[4]	[4]	8.50	5.63	15.25	23.25	19.25
8.00	1 (std.)	3.500	3 1/4-12	3.50	9.50	6.38	16.75	25.25	21.25
	2	5.500	[4]	[4]	9.50	6.38	16.75	25.25	21.25
	3	4.000	[4]	[4]	9.50	6.38	16.75	25.25	21.25
	4	4.500	[4]	[4]	9.50	6.38	16.75	25.25	21.25
	5	5.000	[4]	[4]	9.50	6.38	16.75	25.25	21.25

[4] To match pin diameter in rod eye and cap, when an oversize rod is required, specify rod end style '3', 'CC' thread and 'A' thread length for the standard rod diameter (Rod No. 1 for the bore), and 'WF' for the oversize rod. Order the rod eye and clevis bracket for the required bore size from the tables on the Style SE Spherical Bearing Accessories page.

Style SE – Recommended maximum swivel angle on each side of the cylinder centerline.

Bore Ø	Head End Mounted		Cap End Mounted	
	Angle a	Tan. of a	Angle a	Tan. of a
7.00	3.00°	0.052	3.00°	0.052
8.00	3.00°	0.052	3.00°	0.052

Note: Dimension X is the maximum off center mounting of the cylinder. To determine dimension X for various stroke lengths multiply the distance between pivot pin holes by tangent of angle a. For extended position use X = XL + 2X stroke.

Mounting Information
Head End Mounting

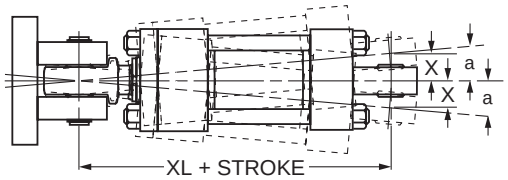

Cap End Mounting

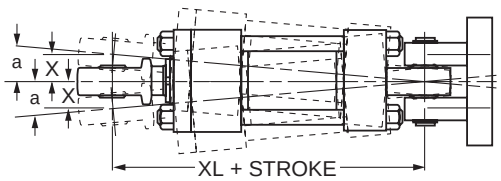

⚠PROP 65 WARNING **WARNING:** This product can expose you to chemicals including **Lead and Lead Compounds** which are known to the State of California to cause cancer and birth defects or other reproductive harm. For more information go to www.P65Warnings.ca.gov

Double Rod Cylinder
Style K

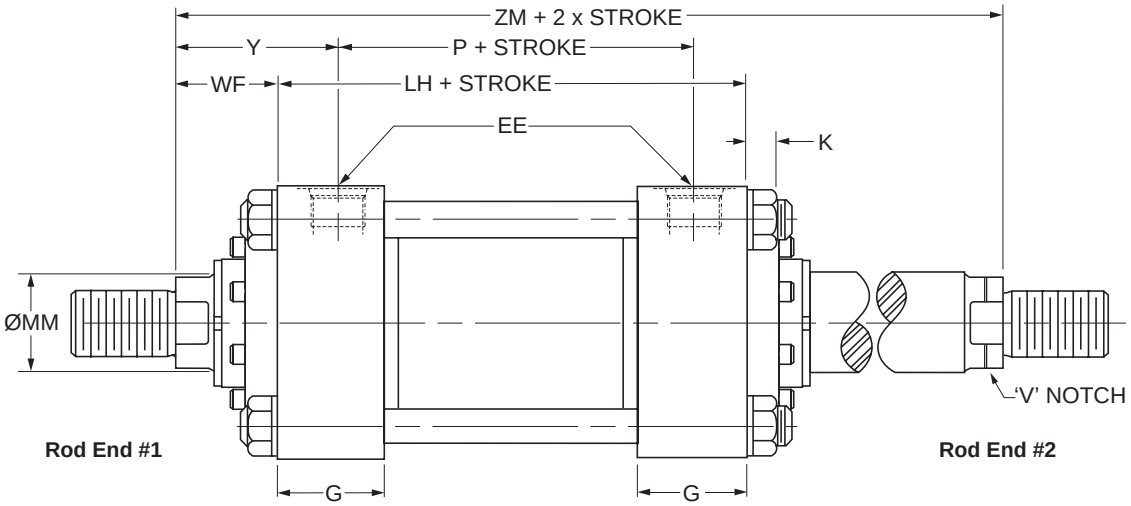

Double Rod End Mounting Styles
See Mounting Groups page in Section H for guidance on double rod end cylinder mounting style selection.

Mounting Styles for Single Rod Models	Mounting Styles for Corresponding Double Rod Models[1]		Dimensions Shown on This Page Supplement Dimensions on 7.00" - 8.00" Bore Pages Listed Below
	Load Connected To Rod On Cylinder Mounting End	Load Connected To Rod Opposite Cylinder Mounting End	
TB	KTB	KTC	34
TD	KTD	KTD	34
J	KJ	KH	35
JB	KJB	KHB	36
JJ	KJJ	KHH	37
C	KC	KC	40
F	KF	KF	40
D	KD	KDB	42
DD	KDD[2]	KDD[2]	44
DE	KDE[2]	KDE[2]	45

[1] Connect load to piston rod without 'V' notch. If only one end of the Double Rod Cylinder is to be cushioned, be sure to clearly specify which end this will be.

[2] Specify XI dimension for Styles DD & DE from #1 rod end (without 'V' notch).

Bore Ø	Rod No.	MM Rod Ø	WF	Add Stroke			Add 2X Stroke
				LH	SNK	SSK	ZM
7.00	1 (std.)	3.00	2.25	8.50	5.38	5.75	13.00
	2	5.00	2.25	8.50	5.38	5.75	13.00
	3	3.50	2.25	8.50	5.38	5.75	13.00
	4	4.00	2.25	8.50	5.38	5.75	13.00
	5	4.50	2.25	8.50	5.38	5.75	13.00
8.00	1 (std.)	3.50	2.25	9.50	6.13	6.75	14.00
	2	5.50	2.25	9.50	6.13	6.75	14.00
	3	4.00	2.25	9.50	6.13	6.75	14.00
	4	4.50	2.25	9.50	6.13	6.75	14.00
	5	5.00	2.25	9.50	6.13	6.75	14.00
Replaces On single rod mounting styles:				LG	SN	SS	–
				All Mtg. Styles	F	C	All Mtg. Styles

How to Use Double Rod Cylinder Dimension Drawings
To determine dimensions for a double rod cylinder, first refer to the desired single rod mounting style cylinder shown on preceding pages of this catalog. (See table above.) After selecting necessary dimensions from that drawing, return to this page supplement the single rod dimensions with those shown on drawing at right and dimension table below. Note that double rod cylinders have a head (Dim. G) at both ends and that dimension LH replaces LG. The double rod dimensions differ from, or are in addition to those for single rod cylinders shown on preceding pages and provide the information needed to completely dimension a double rod cylinder.

On a double rod cylinder where the two rod ends are different, be sure to clearly state which rod end is to be assembled at which end. Port position 1 is standard. If other than standard, specify pos. 2, 3 or 4 when viewed from rod end #1 only. See port position information in Section H.

⚠**PROP 65 WARNING** **WARNING:** This product can expose you to chemicals including **Lead and Lead Compounds** which are known to the State of California to cause cancer and birth defects or other reproductive harm. For more information go to www.P65Warnings.ca.gov

Notes

⚠**PROP 65 WARNING** **WARNING:** This product can expose you to chemicals including **Lead and Lead Compounds** which are known to the State of California to cause cancer and birth defects or other reproductive harm. For more information go to www.P65Warnings.ca.gov

Section C

Series 2HD 1.50"-6.00" Bore / 3HD 7.00" & 8.00" Bore
Heavy Duty Hydraulic Cylinders

	2HD 1.50"-6.00" Bore	3HD 7.00" & 8.00" Bore
Performance	50	50
Specifications, Mounting Styles	51	51
Rod End Styles and Dimensions	52-53	71
TD, T, TB, TC Mount Dimensions	54	72
J Mount Dimensions	55	73
JB Mount Dimensions	56	74
JJ Mount Dimensions	57	75
H Mount Dimensions	58	76
HB Mount Dimensions	59	77
HH Mount Dimensions	60	77
C Mount Dimensions	61	78
F Mount Dimensions	62	78
BB Mount Dimensions	63	79
D Mount Dimensions	64	80
DB Mount Dimensions	65	81
DD Mount Dimensions	66	82
DE Mount Dimensions	67	83
Style SB Spherical Bearing Mounting	68	–
Style SE Spherical Bearing Mounting	69	84
Double Rod Cylinders / Gland Retention	70	85

⚠PROP 65 WARNING **WARNING:** This product can expose you to chemicals including **Lead and Lead Compounds** which are known to the State of California to cause cancer and birth defects or other reproductive harm. For more information go to www.P65Warnings.ca.gov

Parker Series 2HD 1.50"-6.00" and 3HD 7.00" & 8.00" Bore Heavy Duty Hydraulic Cylinders



Series 2HD 1.50"-6.00" and 3HD 7.00" & 8.00" Bore cylinders offer increased durability and ease of service with the addition of a bolt-on rod gland. The gland assembly is externally removable without cylinder disassembly. The rod seal has multiple sealing edges to produce “dry rod” performance and it is molded from a special polyurethane material that is extremely resistant to abrasion and extrusion.

Primary Seal – Polyurethane Tri-Lip Rod Seal is a proven leak proof design – completely self-compensating and self-relieving to withstand variations and conform to mechanical deflection that may occur. Alternative seal materials are available to suit your application.

Secondary Seal – Polyurethane Rod Wiper – wipes clean any oil film adhering to the rod on the extend stroke and cleans the rod on the return stroke.

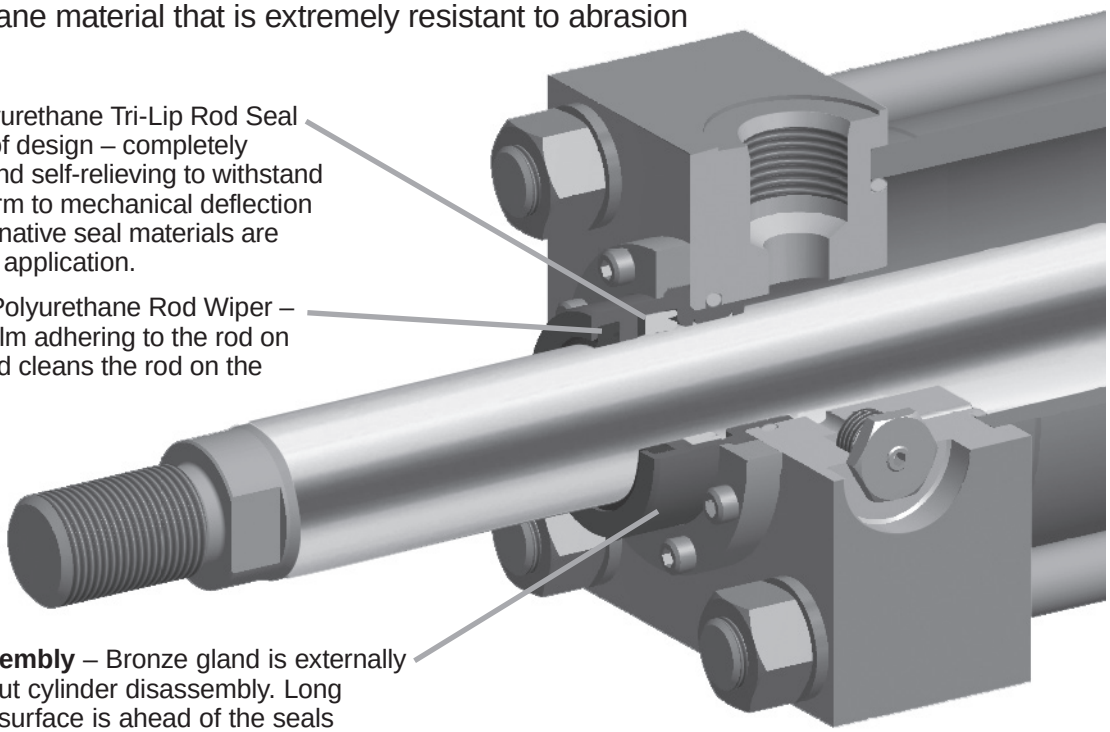

Rod Gland Assembly – Bronze gland is externally removable without cylinder disassembly. Long inboard bearing surface is ahead of the seals assuring lubrication by cylinder operating fluid.

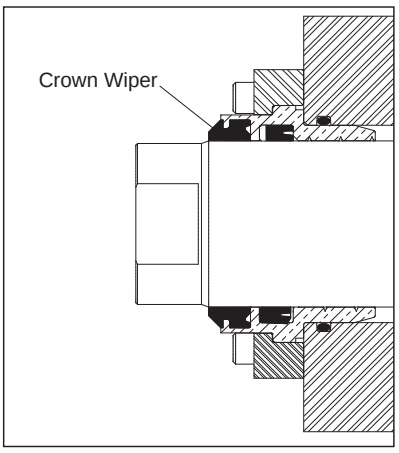

Parker Crown Wiper™ for Series 2HD 1.50"-6.00" and 7.00" & 8.00" bore 3HD – For environments that contain fine abrasive particulate specify the Crown Wiper option. The Crown Wiper is a proven superior alternative to piston rod end boots or metallic wipers that can ingest particulate. It has a sharp leading edge to effectively clean the piston rod and a beveled shape to prevent contaminant intrusion by channeling it away from the gland. It also acts as a secondary seal to wipe clean any oil film adhering to the rod on the extend stroke.

⚠**PROP 65 WARNING** **WARNING:** This product can expose you to chemicals including **Lead and Lead Compounds** which are known to the State of California to cause cancer and birth defects or other reproductive harm. For more information go to www.P65Warnings.ca.gov

Standard Specifications

- Heavy Duty Service – ANSI/(NFPA) T3.6.7R3 - 2009 Specifications and Mounting Dimension Standards
- Standard Construction – Square Head – Tie Rod Design
- Nominal Pressure – 3000 psi[1]
- Standard Fluid – Hydraulic Oil
- Standard Temperature – –10°F to +165°F[2]
- Bore Diameters – 1.50" through 8.00" (Larger sizes available)

In line with our policy of continuing product improvement, specifications in this catalog are subject to change.

Note: Series 2HD and 3HD Hydraulic Cylinders fully meet ANSI/(NFPA) T3.6.7R3 - 2009 Specifications and Mounting Dimension Standards for Square Head Industrial Fluid Power Cylinders.

- Piston Rod Diameter – 0.625" through 5.500"
- Mounting Styles – 19 standard styles at various application ratings
- Strokes – Available in any practical stroke length
- Cushions – Optional at either end or both ends of stroke. "Float Check" standard at cap end of 1.50" - 6.00" bore.
- Rod Ends – Four Standard Choices – Specials to Order

[1] If hydraulic operating pressure exceeds 3000 psi, send application data for engineering evaluation and recommendation. See Section H for actual design factors.

[2] See Section H for higher temperature service.

Available Mounting Styles

Most of the illustrated mounting styles below are available in double rod cylinders.

Basic
Style T
1.50" - 8.00"
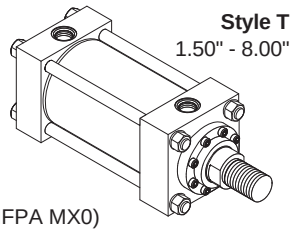
(NFPA MX0)

Tie Rods Extended Head End
Style TB
1.50" - 8.00"
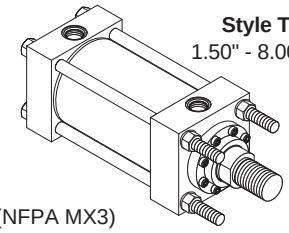
(NFPA MX3)

Tie Rods Extended Cap End
Style TC
1.50" - 8.00"
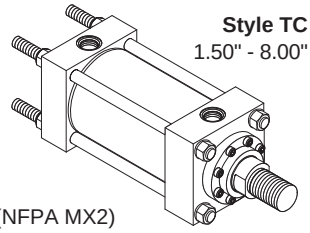
(NFPA MX2)

Tie Rods Extended Both Ends
Style TD
1.50" - 8.00"
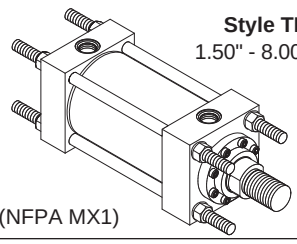
(NFPA MX1)

Head Rectangular Flange
Style J
1.50" - 8.00"
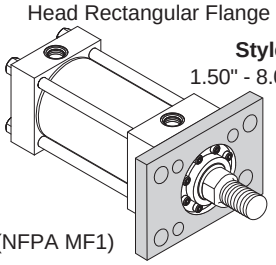
(NFPA MF1)

Head Square Flange
Style JB
1.50" - 8.00"
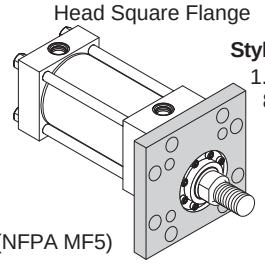
(NFPA MF5)

Head Rectangular
Style JJ
1.50" - 8.00"
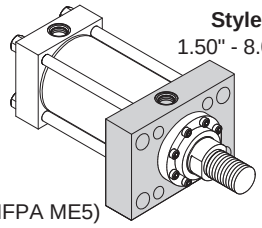
(NFPA ME5)

Cap Rectangular Flange
Style H
1.50" - 8.00"
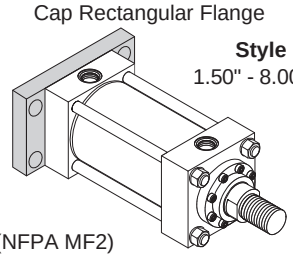
(NFPA MF2)

Cap Square Flange
Style HB
1.50" - 8.00"
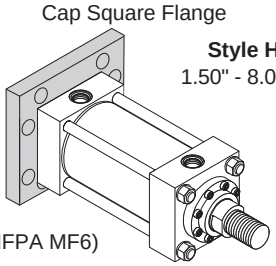
(NFPA MF6)

Cap Rectangular
Style HH
1.50" - 8.00"
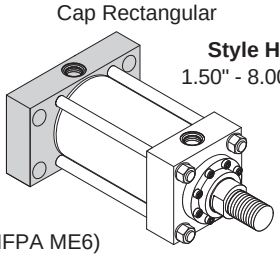
(NFPA ME6)

Side Lug
Style C
1.50" - 8.00"
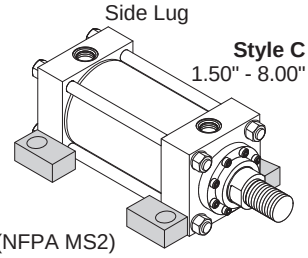
(NFPA MS2)

Side Tapped
Style F
1.50" - 8.00"
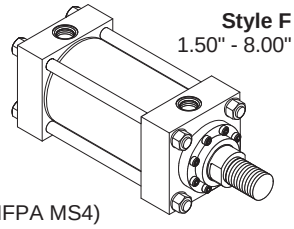
(NFPA MS4)

Cap Fixed Clevis
Style BB
1.50" - 8.00"
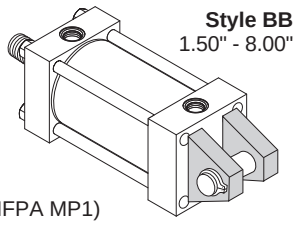
(NFPA MP1)

Head Trunnion
Style D
1.50" - 8.00"
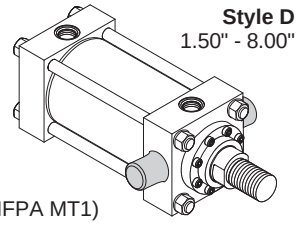
(NFPA MT1)

Cap Trunnion
Style DB
1.50" - 8.00"
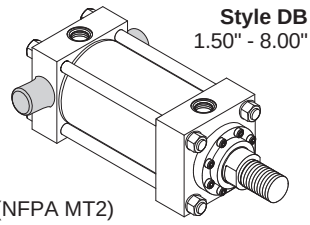
(NFPA MT2)

Intermediate Fixed Trunnion
Style DD
1.50" - 8.00"
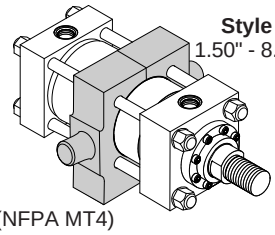
(NFPA MT4)

HD Intermediate Fixed Trunnion
Style DE
4.00" - 8.00"
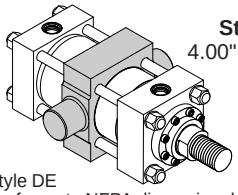
Style DE conforms to NFPA dimensional standard.

Spherical Bearing
Style SB
1.50" - 6.00"
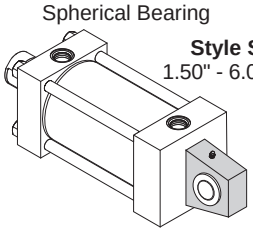

HD Spherical Bearing
Style SE
1.50" - 8.00"
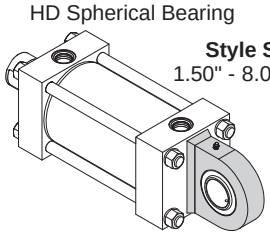

Double Rod Cylinders
Style KT Shown
1.50" - 8.00"
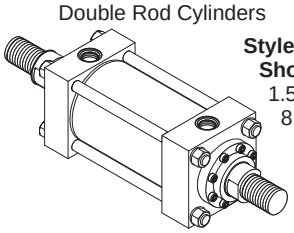

⚠PROP 65 WARNING **WARNING:** This product can expose you to chemicals including **Lead and Lead Compounds** which are known to the State of California to cause cancer and birth defects or other reproductive harm. For more information go to www.P65Warnings.ca.gov

Rod End Dimensions – circular bolt-on retainer construction

Thread Style 4 (NFPA Style SM)
Small Male

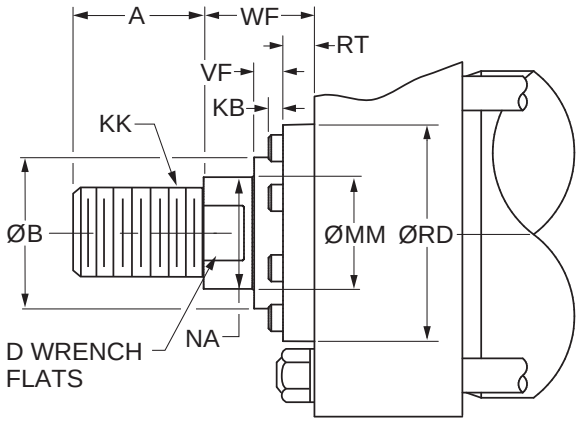

Thread Style 8 (NFPA Style IM)
Intermediate Male

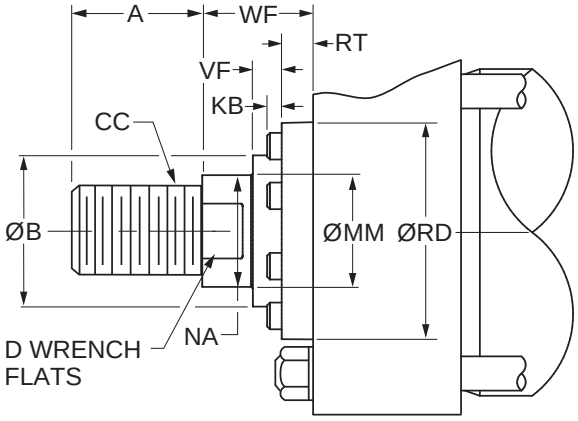

See Gland Retention page to determine which bore, rod and mounting style combinations have circular bolt-on retainers and which have tie rod retained glands.

Rod End Dimensions

Bore Ø	Rod No.	MM Rod Ø	Thread		A	B Ø +.000 -.002	D	F	KB	NA	RD	RT	V	VF	W	WF
			Style 8 CC	Style 4 KK												
1.50	1 (Std.)	0.625	1/2-20	7/16-20	0.75	1.124	0.50	0.38	0.03	0.56	1.94	0.36	0.25	0.27	0.63	1.00
	2	1.000	7/8-14	3/4-16	1.13	1.499	0.88	0.38	0.03	0.94	2.38	0.36	0.50	0.52	1.00	1.38
2.00	1 (Std.)	1.000	7/8-14	3/4-16	1.13	1.499	0.88	0.63	0.03	0.94	2.38	0.36	0.25	0.52	0.75	1.38
	2	1.375	1 1/4-12	1-14	1.63	1.999	1.13	0.63	0.19	1.31	2.87	0.36	0.38	0.64	1.00	1.63
2.50	1 (Std.)	1.000	7/8-14	3/4-16	1.13	1.499	0.88	0.63	0.03	0.94	2.38	0.36	0.25	0.52	0.75	1.38
	2	1.750	1 1/2-12	1 1/4-12	2.00	2.374	1.50	0.63	0.03	1.69	3.47	0.60	0.50	0.53	1.25	1.88
	3	1.375	1 1/4-12	1-14	1.63	1.999	1.13	0.63	0.19	1.31	2.87	0.36	0.38	0.64	1.00	1.63
3.25	1 (Std.)	1.375	1 1/4-12	1-14	1.63	1.999	1.13	0.75	0.19	1.31	2.87	0.36	0.25	0.64	0.88	1.63
	2	2.000	1 3/4-12	1 1/2-12	2.25	2.624	1.69	0.75	0.13	1.94	3.72	0.60	0.38	0.53	1.25	2.00
	3	1.750	1 1/2-12	1 1/4-12	2.00	2.374	1.50	0.75	0.03	1.69	3.47	0.60	0.38	0.53	1.13	1.88
4.00	1 (Std.)	1.750	1 1/2-12	1 1/4-12	2.00	2.374	1.50	0.88	0.03	1.69	3.47	0.60	0.25	0.53	1.00	1.88
	2	2.500	2 1/4-12	1 7/8-12	3.00	3.124	2.06	0.88	0.25	2.38	4.25	0.60	0.38	0.65	1.38	2.25
	3	2.000	1 3/4-12	1 1/2-12	2.25	2.624	1.69	0.88	0.13	1.94	3.72	0.60	0.25	0.53	1.13	2.00
5.00	1 (Std.)	2.000	1 3/4-12	1 1/2-12	2.25	2.624	1.69	0.88	0.13	1.94	3.72	0.60	0.25	0.53	1.13	2.00
	2	3.500	3 1/4-12	2 1/2-12	3.50	4.249	3.00	0.88	-	3.38	5.76	0.91	0.38	0.34	1.38	2.25
	3	2.500	2 1/4-12	1 7/8-12	3.00	3.124	2.06	0.88	0.25	2.38	4.25	0.60	0.38	0.65	1.38	2.25
	4	3.000	2 3/4-12	2 1/4-12	3.50	3.749	2.63	0.88	-	2.88	5.26	0.85	0.38	0.41	1.38	2.25
6.00	1 (Std.)	2.500	2 1/4-12	1 7/8-12	3.00	3.124	2.06	1.00	0.25	2.38	4.25	0.60	0.25	0.65	1.25	2.25
	2	4.000	3 3/4-12	3-12	4.00	4.749	3.38	1.00	-	3.88	6.31	0.91	0.25	0.34	1.25	2.25
	3	3.000	2 3/4-12	2 1/4-12	3.50	3.749	2.63	1.00	-	2.88	5.26	0.85	0.25	0.41	1.25	2.25
	4	3.500	3 1/4-12	2 1/2-12	3.50	4.249	3.00	1.00	-	3.38	5.76	0.91	0.25	0.34	1.25	2.25

"Special" Thread Style 3

Special thread, extension, rod eye, blank, etc., are also available.

To order, specify "Style 3" and give desired dimensions for KK, A, W or WF. If otherwise special, furnish dimensioned sketch.

Tie Rod Retained Gland

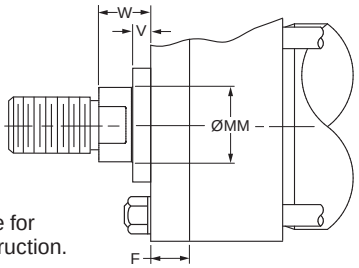

See Gland Retention page for styles that have this construction.

⚠PROP 65 WARNING **WARNING:** This product can expose you to chemicals including **Lead and Lead Compounds** which are known to the State of California to cause cancer and birth defects or other reproductive harm. For more information go to www.P65Warnings.ca.gov

Rod End Dimensions – circular bolt-on retainer construction

Thread Style 9[2]
(NFPA Style SF) Small Female

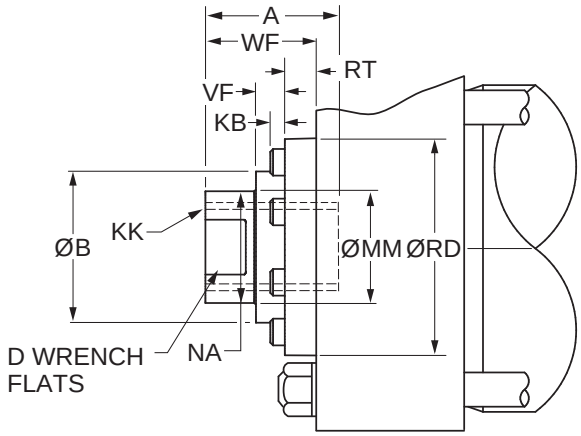

Style 55[1]
Flanged Rod End

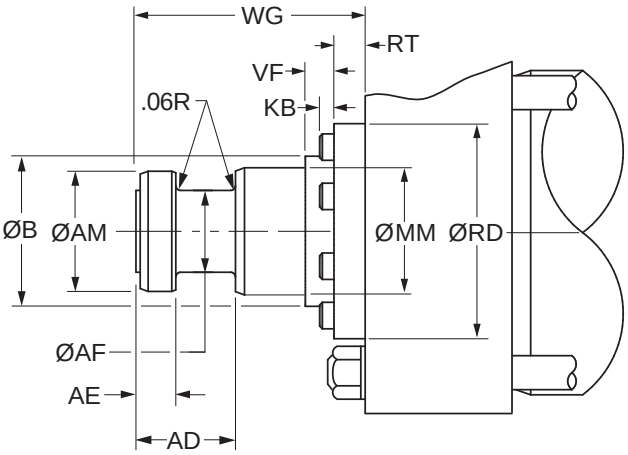

See Gland Retention page to determine which bore, rod and mounting style combinations have circular bolt-on retainers and which have tie rod retained glands.

Rod End Dimensions

Bore Ø	Rod No.	MM Rod Ø	Thread Style 9 KK	A	AD	AE +.001 -.001	AF Ø	AM Ø	B Ø +.000 -.002	D	KB	NA	RD	RT	VF	WF	WG
1.50	1 (Std.)	0.625	7/16-20	0.75	0.63	0.249	0.38	0.57	1.124	0.50	0.03	0.56	1.94	0.36	0.27	1.00	1.75
	2	1.000	3/4-16	1.13	0.94	0.374	0.69	0.95	1.499	0.88	0.03	0.94	2.38	0.36	0.52	1.38	2.38
2.00	1 (Std.)	1.000	3/4-16	1.13	0.94	0.374	0.69	0.95	1.499	0.88	0.03	0.94	2.38	0.36	0.52	1.38	2.38
	2	1.375	1-14	1.63	1.06	0.374	0.88	1.32	1.999	1.13	0.19	1.31	2.87	0.36	0.64	1.63	2.75
2.50	1 (Std.)	1.000	3/4-16	1.13	0.94	0.374	0.69	0.95	1.499	0.88	0.03	0.94	2.38	0.36	0.52	1.38	2.38
	2	1.750	1 1/4-12	2.00	1.31	0.499	1.13	1.70	2.374	1.50	0.03	1.69	3.47	0.60	0.53	1.88	3.13
	3	1.375	1-14	1.63	1.06	0.374	0.88	1.32	1.999	1.13	0.19	1.31	2.87	0.36	0.64	1.63	2.75
3.25	1 (Std.)	1.375	1-14	1.63	1.06	0.374	0.88	1.32	1.999	1.13	0.19	1.31	2.87	0.36	0.64	1.63	2.75
	2	2.000	1 1/2-12	2.25	1.69	0.624	1.38	1.95	2.624	1.69	0.13	1.94	3.72	0.60	0.53	2.00	3.75
	3	1.750	1 1/4-12	2.00	1.31	0.499	1.13	1.70	2.374	1.50	0.03	1.69	3.47	0.60	0.53	1.88	3.13
4.00	1 (Std.)	1.750	1 1/4-12	2.00	1.31	0.499	1.13	1.70	2.374	1.50	0.03	1.69	3.47	0.60	0.53	1.88	3.13
	2	2.500	1 7/8-12	3.00	1.94	0.749	1.75	2.45	3.124	2.06	0.25	2.38	4.25	0.60	0.65	2.25	4.50
	3	2.000	1 1/2-12	2.25	1.69	0.624	1.38	1.95	2.624	1.69	0.13	1.94	3.72	0.60	0.53	2.00	3.75
5.00	1 (Std.)	2.000	1 1/2-12	2.25	1.69	0.624	1.38	1.95	2.624	1.69	0.13	1.94	3.72	0.60	0.53	2.00	3.75
	2	3.500	2 1/2-12	3.50	2.69	0.999	2.50	3.45	4.249	3.00	-	3.38	5.76	0.91	0.34	2.25	5.63
	3	2.500	1 7/8-12	3.00	1.94	0.749	1.75	2.45	3.124	2.06	0.25	2.38	4.25	0.60	0.65	2.25	4.50
	4	3.000	2 1/4-12	3.50	2.44	0.874	2.25	2.95	3.749	2.63	-	2.88	5.26	0.85	0.41	2.25	4.88
6.00	1 (Std.)	2.500	1 7/8-12	3.00	1.94	0.749	1.75	2.45	3.124	2.06	0.25	2.38	4.25	0.60	0.65	2.25	4.50
	2	4.000	3-12	4.00	2.69	0.999	3.00	3.95	4.749	3.38	-	3.88	6.31	0.91	0.34	2.25	5.75
	3	3.000	2 1/4-12	3.50	2.44	0.874	2.25	2.95	3.749	2.63	-	2.88	5.26	0.85	0.41	2.25	4.88
	4	3.500	2 1/2-12	3.50	2.69	0.999	2.50	3.45	4.249	3.00	-	3.38	5.76	0.91	0.34	2.25	5.63

"Special" Thread Style 3

Special thread, extension, rod eye, blank, etc., are also available.

To order, specify "Style 3" and give desired dimensions for KK, A, W or WF. If otherwise special, furnish dimensioned sketch.

[1] For special WG dimension, specify "Style 3" and give desired dimension for WG. For other changes, place "S" in the model code, and describe rod end with dimensioned sketch.

[2] Style 9 stroke restrictions may apply. See Style 9 Minimum Stroke Table on How to Order page for details.

Tie Rod Retained Gland

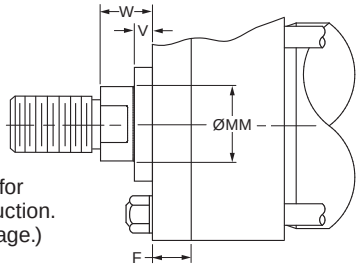

See Gland Retention page for styles that have this construction. (Dimensions on opposite page.)

⚠PROP 65 WARNING **WARNING:** This product can expose you to chemicals including **Lead and Lead Compounds** which are known to the State of California to cause cancer and birth defects or other reproductive harm. For more information go to www.P65Warnings.ca.gov

Tie Rods Extended Both Ends Mounting
Style TD
(NFPA Style MX1)

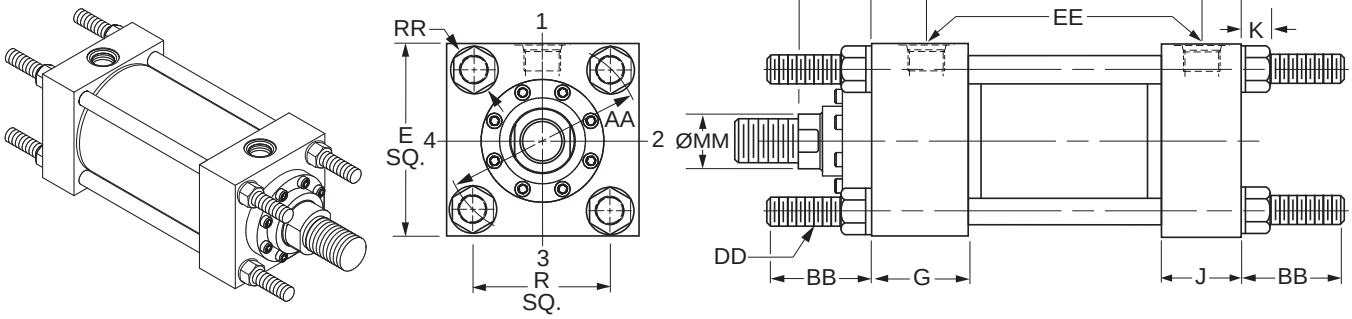

Style TD – Dimensional and Mounting Data

Bore Ø	Rod No.	MM Rod Ø	AA	BB	DD	E	EE		G	J	K Max.	R	RR	WF	Y	Add Stroke		
							NPTF[1]	SAE[2]								LG	P	ZJ
1.50	1 (std.)	0.625	2.31	1.38	3/8-24	2.50	1/2	10	1.75	1.50	0.42	1.63	0.68	1.00	2.00	4.63	2.88	5.63
	2	1.000	2.31	1.38	3/8-24	2.50	1/2	10	1.75	1.50	0.42	1.63	0.68	1.38	2.38	4.63	2.88	6.00
2.00	1 (std.)	1.000	2.90	1.81	1/2-20	3.00	1/2	10	1.75	1.50	0.57	2.05	0.90	1.38	2.38	4.63	2.88	6.00
	2	1.375	2.90	1.81	1/2-20	3.00	1/2	10	1.75	1.50	0.57	2.05	0.90	1.63	2.63	4.63	2.88	6.25
2.50	1 (std.)	1.000	3.61	1.81	1/2-20	3.50	1/2	10	1.75	1.50	0.57	2.55	0.90	1.38	2.38	4.75	3.00	6.13
	2	1.750	3.61	1.81	1/2-20	3.50	1/2	10	1.75	1.50	0.57	2.55	0.90	1.88	2.88	4.75	3.00	6.63
	3	1.375	3.61	1.81	1/2-20	3.50	1/2	10	1.75	1.50	0.57	2.55	0.90	1.63	2.63	4.75	3.00	6.38
3.25	1 (std.)	1.375	4.60	2.31	5/8-18	4.50	3/4	12	2.00	1.75	0.68	3.25	1.11	1.63	2.75	5.50	3.50	7.13
	2	2.000	4.60	2.31	5/8-18	4.50	3/4	12	2.00	1.75	0.68	3.25	1.11	2.00	3.13	5.50	3.50	7.50
	3	1.750	4.60	2.31	5/8-18	4.50	3/4	12	2.00	1.75	0.68	3.25	1.11	1.88	3.00	5.50	3.50	7.38
4.00	1 (std.)	1.750	5.40	2.31	5/8-18	5.00	3/4	12	2.00	1.75	0.68	3.82	1.11	1.88	3.00	5.75	3.75	7.63
	2	2.500	5.40	2.31	5/8-18	5.00	3/4	12	2.00	1.75	0.68	3.82	1.11	2.25	3.38	5.75	3.75	8.00
	3	2.000	5.40	2.31	5/8-18	5.00	3/4	12	2.00	1.75	0.68	3.82	1.11	2.00	3.13	5.75	3.75	7.75
5.00	1 (std.)	2.000	7.00	3.19	7/8-14	6.50	3/4	12	2.00	1.75	0.94	4.95	1.55	2.00	3.13	6.25	4.25	8.25
	2	3.500	7.00	3.19	7/8-14	6.50	3/4	12	2.00	1.75	0.94	4.95	1.55	2.25	3.38	6.25	4.25	8.50
	3	2.500	7.00	3.19	7/8-14	6.50	3/4	12	2.00	1.75	0.94	4.95	1.55	2.25	3.38	6.25	4.25	8.50
	4	3.000	7.00	3.19	7/8-14	6.50	3/4	12	2.00	1.75	0.94	4.95	1.55	2.25	3.38	6.25	4.25	8.50
6.00	1 (std.)	2.500	8.10	3.63	1-14	7.50	1	16	2.25	2.25	1.05	5.73	1.77	2.25	3.50	7.38	4.88	9.63
	2	4.000	8.10	3.63	1-14	7.50	1	16	2.25	2.25	1.05	5.73	1.77	2.25	3.50	7.38	4.88	9.63
	3	3.000	8.10	3.63	1-14	7.50	1	16	2.25	2.25	1.05	5.73	1.77	2.25	3.50	7.38	4.88	9.63
	4	3.500	8.10	3.63	1-14	7.50	1	16	2.25	2.25	1.05	5.73	1.77	2.25	3.50	7.38	4.88	9.63

[1]NPTF ports are available at no extra charge.
[2]SAE straight thread ports are standard and are indicated by port number.

Style T

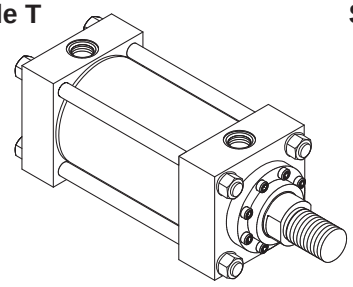

Style TB

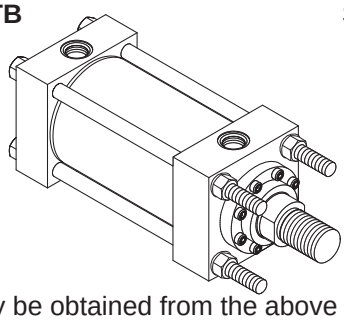

Style TC

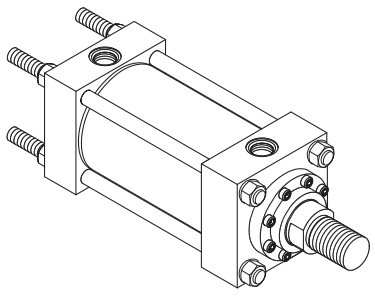

Dimensions for T, TB and TC Mount may be obtained from the above dimensional table.

⚠**PROP 65 WARNING** **WARNING:** This product can expose you to chemicals including **Lead and Lead Compounds** which are known to the State of California to cause cancer and birth defects or other reproductive harm. For more information go to www.P65Warnings.ca.gov

Head Rectangular Flange Mounting
Style J
(NFPA Style MF1)

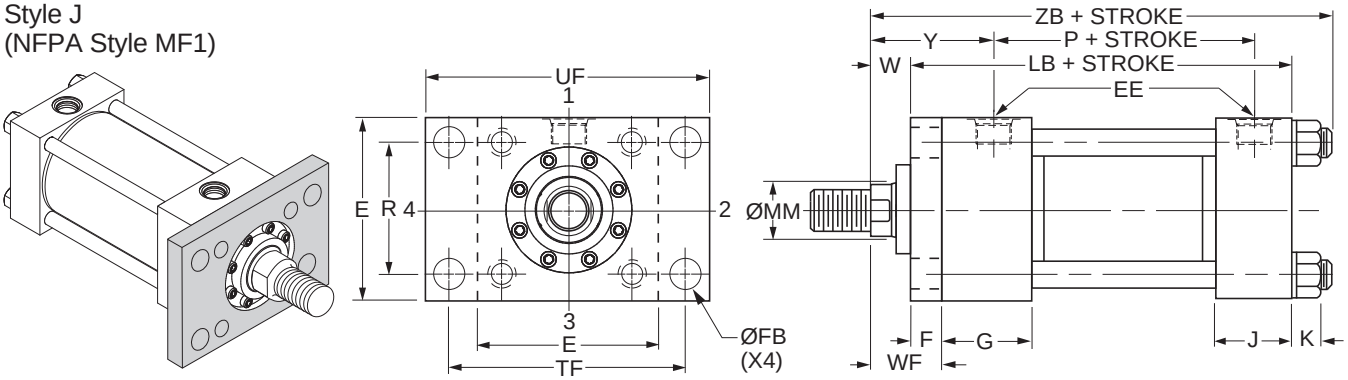

Style J – Dimensional and Mounting Data

Bore Ø	E	EE		F	FB Ø	G	J	K Max.	R	TF	UF	Add Stroke	
		NPTF[1]	SAE[2]									LB	P
1.50	2.50	1/2	10	0.38	0.44	1.75	1.50	0.42	1.63	3.44	4.25	5.00	2.88
2.00	3.00	1/2	10	0.63	0.56	1.75	1.50	0.57	2.05	4.13	5.13	5.25	2.88
2.50	3.50	1/2	10	0.63	0.56	1.75	1.50	0.57	2.55	4.63	5.63	5.38	3.00
3.25	4.50	3/4	12	0.75	0.69	2.00	1.75	0.68	3.25	5.88	7.13	6.25	3.50
4.00	5.00	3/4	12	0.88	0.69	2.00	1.75	0.68	3.82	6.38	7.63	6.63	3.75
5.00	6.50	3/4	12	0.88	0.94	2.00	1.75	0.94	4.95	8.19	9.75	7.13	4.25
6.00	7.50	1	16	1.00	1.06	2.25	2.25	1.05	5.73	9.44	11.25	8.38	4.88

[1]NPTF ports are available at no extra charge.
[2]SAE straight thread ports are standard and are indicated by port number.

Style J – Dimensional and Mounting Data

Bore Ø	Rod No.	MM Rod Ø	W	WF	Y	Add Stroke
						ZB Max.
1.50	1 (std.)	0.625	0.63	1.00	2.00	6.29
	2	1.000	1.00	1.38	2.38	6.67
2.00	1 (std.)	1.000	0.75	1.38	2.38	6.81
	2	1.375	1.00	1.63	2.63	7.06
2.50	1 (std.)	1.000	0.75	1.38	2.38	6.93
	2	1.750	1.25	1.88	2.88	7.43
	3	1.375	1.00	1.63	2.63	7.18
3.25	1 (std.)	1.375	0.88	1.63	2.75	8.06
	2	2.000	1.25	2.00	3.13	8.43
	3	1.750	1.13	1.88	3.00	8.31
4.00	1 (std.)	1.750	1.00	1.88	3.00	8.56
	2	2.500	1.38	2.25	3.38	8.94
	3	2.000	1.13	2.00	3.13	8.68
5.00	1 (std.)	2.000	1.13	2.00	3.13	9.44
	2	3.500	1.38	2.25	3.38	9.69
	3	2.500	1.38	2.25	3.38	9.69
	4	3.000	1.38	2.25	3.38	9.69
6.00	1 (std.)	2.500	1.25	2.25	3.50	10.93
	2	4.000	1.25	2.25	3.50	10.93
	3	3.000	1.25	2.25	3.50	10.93
	4	3.500	1.25	2.25	3.50	10.93

Style J – Maximum Operating Pressure / 2HD

Bore Ø	Maximum psi Push[3]			
	Rod Code			
	1	2	3	4
1.50	1400	1000	-	-
2.00	2000	1200	-	-
2.50	700	1000	700	-
3.25	800	600	800	-
4.00	1000	700	1000	-
5.00	850	800	850	450
6.00	650	400	650	400

[3]Maximum Pressure Rating – Push Application.

⚠**PROP 65 WARNING** **WARNING:** This product can expose you to chemicals including **Lead and Lead Compounds** which are known to the State of California to cause cancer and birth defects or other reproductive harm. For more information go to www.P65Warnings.ca.gov

Head Square Flange Mounting
Style JB
(NFPA Style MF5)

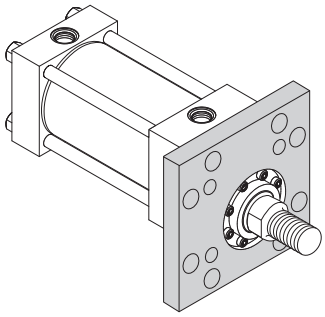

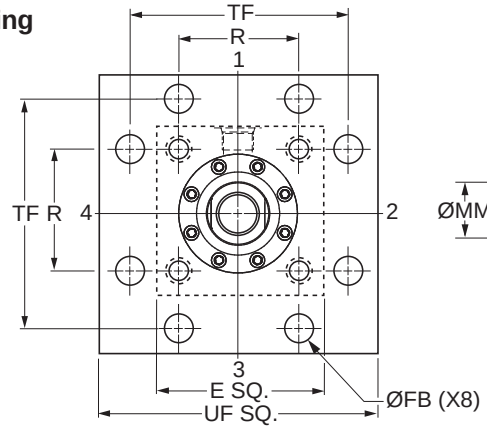

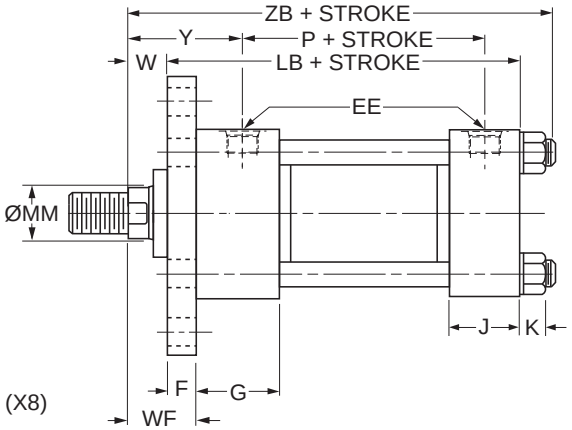

Style JB – Dimensional and Mounting Data

Bore Ø	E	EE		F	FB Ø	G	J	K Max.	R	TF	UF	Add Stroke	
		NPTF[1]	SAE[2]									LB	P
1.50	2.50	1/2	10	0.38	0.44	1.75	1.50	0.42	1.63	3.44	4.25	5.00	2.88
2.00	3.00	1/2	10	0.63	0.56	1.75	1.50	0.57	2.05	4.13	5.13	5.25	2.88
2.50	3.50	1/2	10	0.63	0.56	1.75	1.50	0.57	2.55	4.63	5.63	5.38	3.00
3.25	4.50	3/4	12	0.75	0.69	2.00	1.75	0.68	3.25	5.88	7.13	6.25	3.50
4.00	5.00	3/4	12	0.88	0.69	2.00	1.75	0.68	3.82	6.38	7.63	6.63	3.75
5.00	6.50	3/4	12	0.88	0.94	2.00	1.75	0.94	4.95	8.19	9.75	7.13	4.25
6.00	7.50	1	16	1.00	1.06	2.25	2.25	1.05	5.73	9.44	11.25	8.38	4.88

[1]NPTF ports are available at no extra charge.
[2]SAE straight thread ports are standard and are indicated by port number.

Style JB – Dimensional and Mounting Data

Bore Ø	Rod No.	MM Rod Ø	W	WF	Y	Add Stroke
						ZB Max.
1.50	1 (std.)	0.625	0.63	1.00	2.00	6.29
	2	1.000	1.00	1.38	2.38	6.67
2.00	1 (std.)	1.000	0.75	1.38	2.38	6.81
	2	1.375	1.00	1.63	2.63	7.06
2.50	1 (std.)	1.000	0.75	1.38	2.38	6.93
	2	1.750	1.25	1.88	2.88	7.43
	3	1.375	1.00	1.63	2.63	7.18
3.25	1 (std.)	1.375	0.88	1.63	2.75	8.06
	2	2.000	1.25	2.00	3.13	8.43
	3	1.750	1.13	1.88	3.00	8.31
4.00	1 (std.)	1.750	1.00	1.88	3.00	8.56
	2	2.500	1.38	2.25	3.38	8.94
	3	2.000	1.13	2.00	3.13	8.68
5.00	1 (std.)	2.000	1.13	2.00	3.13	9.44
	2	3.500	1.38	2.25	3.38	9.69
	3	2.500	1.38	2.25	3.38	9.69
	4	3.000	1.38	2.25	3.38	9.69
6.00	1 (std.)	2.500	1.25	2.25	3.50	10.93
	2	4.000	1.25	2.25	3.50	10.93
	3	3.000	1.25	2.25	3.50	10.93
	4	3.500	1.25	2.25	3.50	10.93

Style JB – Maximum Operating Pressure / 2HD

Bore Ø	Maximum psi Push[3]			
	Rod Code			
	1	2	3	4
1.50	3000	3000	-	-
2.00	3000	3000	-	-
2.50	3000	3000	3000	-
3.25	3000	3000	3000	-
4.00	3000	3000	3000	-
5.00	2500	2300	2500	1800
6.00	2000	1600	2000	1600

[3]Maximum Pressure Rating – Push Application.

⚠**PROP 65 WARNING** **WARNING:** This product can expose you to chemicals including **Lead and Lead Compounds** which are known to the State of California to cause cancer and birth defects or other reproductive harm. For more information go to www.P65Warnings.ca.gov

Head Rectangular Mounting
Style JJ
(NFPA Style ME5)

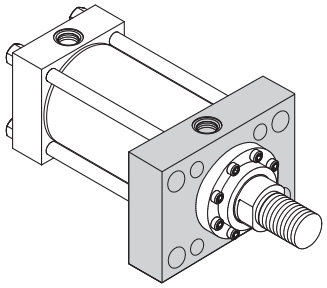

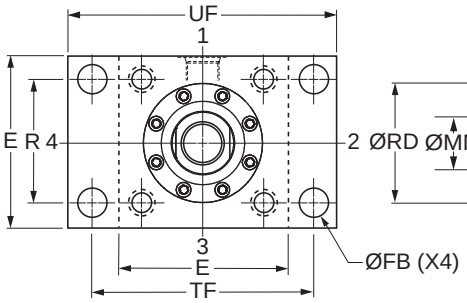

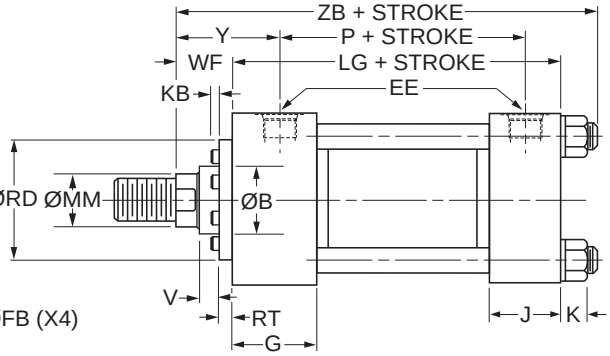

Style JJ – Dimensional and Mounting Data

Bore Ø	E	EE		FB Ø	G	J	K Max.	R	TF	UF	Add Stroke	
		NPTF[1]	SAE[2]								LG	P
1.50	2.50	1/2	10	0.44	1.75	1.50	0.42	1.63	3.44	4.25	4.63	2.88
2.00	3.00	1/2	10	0.56	1.75	1.50	0.57	2.05	4.13	5.13	4.63	2.88
2.50	3.50	1/2	10	0.56	1.75	1.50	0.57	2.55	4.63	5.63	4.75	3.00
3.25	4.50	3/4	12	0.69	2.00	1.75	0.68	3.25	5.88	7.13	5.50	3.50
4.00	5.00	3/4	12	0.69	2.00	1.75	0.68	3.82	6.38	7.63	5.75	3.75
5.00	6.50	3/4	12	0.94	2.00	1.75	0.94	4.95	8.19	9.75	6.25	4.25
6.00	7.50	1	16	1.06	2.25	2.25	1.05	5.73	9.44	11.25	7.38	4.88

[1]NPTF ports are available at no extra charge.
[2]SAE straight thread ports are standard and are indicated by port number.

Style JJ – Dimensional and Mounting Data

Bore Ø	Rod No.	MM Rod Ø	B Ø +.000 -.002	KB	RD Ø	RT	V	WF	Y	Add Stroke
										ZB Max
1.50	1 (std.)	0.625	1.124	0.03	1.94	0.36	0.27	1.00	2.00	6.29
	2	1.000	1.499	0.03	2.38	0.36	0.52	1.38	2.38	6.67
2.00	1 (std.)	1.000	1.499	0.03	2.38	0.36	0.52	1.38	2.38	6.81
	2	1.375	1.999	0.19	2.87	0.36	0.64	1.63	2.63	7.06
2.50	1 (std.)	1.000	1.499	0.03	2.38	0.36	0.52	1.38	2.38	6.93
	2	1.750	2.374	0.03	3.47	0.60	0.53	1.88	2.88	7.43
	3	1.375	1.999	0.19	2.87	0.36	0.64	1.63	2.63	7.18
3.25	1 (std.)	1.375	1.999	0.19	2.87	0.36	0.64	1.63	2.75	8.06
	2	2.000	2.624	0.13	3.72	0.60	0.53	2.00	3.13	8.43
	3	1.750	2.374	0.03	3.47	0.60	0.53	1.88	3.00	8.31
4.00	1 (std.)	1.750	2.374	0.03	3.47	0.60	0.53	1.88	3.00	8.56
	2	2.500	3.124	0.25	4.25	0.60	0.65	2.25	3.38	8.94
	3	2.000	2.624	0.13	3.72	0.60	0.53	2.00	3.13	8.68
5.00	1 (std.)	2.000	2.624	0.13	3.72	0.60	0.53	2.00	3.13	9.44
	2	3.500	4.249	-	5.76	0.91	0.34	2.25	3.38	9.69
	3	2.500	3.124	0.25	4.25	0.60	0.65	2.25	3.38	9.69
	4	3.000	3.749	-	5.26	0.85	0.41	2.25	3.38	9.69
6.00	1 (std.)	2.500	3.124	0.25	4.25	0.60	0.65	2.25	3.50	10.93
	2	4.000	4.749	-	6.31	0.91	0.34	2.25	3.50	10.93
	3	3.000	3.749	-	5.26	0.85	0.41	2.25	3.50	10.93
	4	3.500	4.249	-	5.76	0.91	0.34	2.25	3.50	10.93

⚠**PROP 65 WARNING** **WARNING:** This product can expose you to chemicals including **Lead and Lead Compounds** which are known to the State of California to cause cancer and birth defects or other reproductive harm. For more information go to www.P65Warnings.ca.gov

Cap Rectangular Flange Mounting
Style H
(NFPA Style MF2)

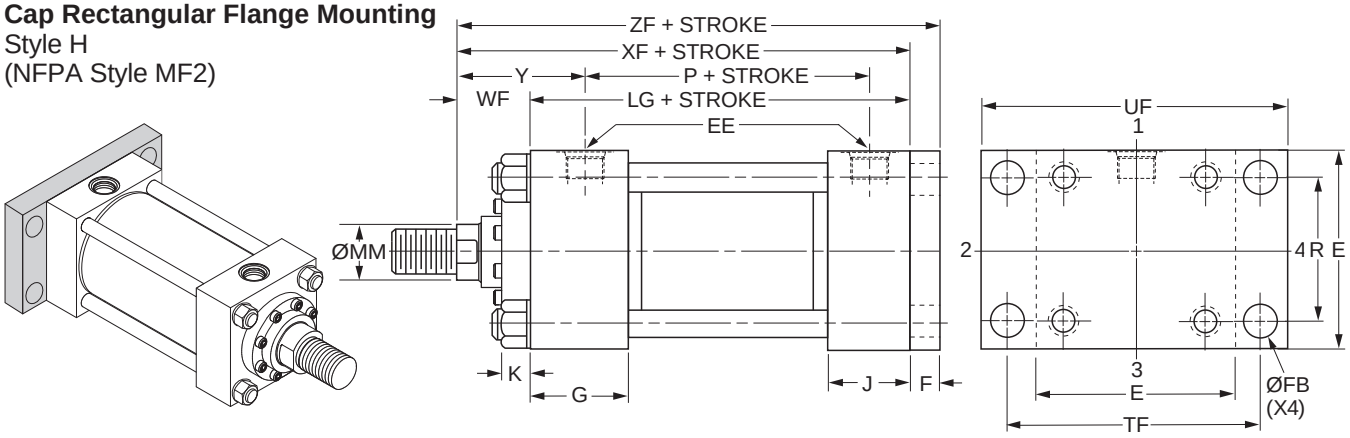

Style H – Dimensional and Mounting Data

Bore Ø	E	EE		F	FB Ø	G	J	K Max.	R	TF	UF	Add Stroke	
		NPTF[1]	SAE[2]									LG	P
1.50	2.50	1/2	10	0.38	0.44	1.75	1.50	0.42	1.63	3.44	4.25	4.63	2.88
2.00	3.00	1/2	10	0.63	0.56	1.75	1.50	0.57	2.05	4.13	5.13	4.63	2.88
2.50	3.50	1/2	10	0.63	0.56	1.75	1.50	0.57	2.55	4.63	5.63	4.75	3.00
3.25	4.50	3/4	12	0.75	0.69	2.00	1.75	0.68	3.25	5.88	7.13	5.50	3.50
4.00	5.00	3/4	12	0.88	0.69	2.00	1.75	0.68	3.82	6.38	7.63	5.75	3.75
5.00	6.50	3/4	12	0.88	0.94	2.00	1.75	0.94	4.95	8.19	9.75	6.25	4.25
6.00	7.50	1	16	1.00	1.06	2.25	2.25	1.05	5.73	9.44	11.25	7.38	4.88

[1]NPTF ports are available at no extra charge.
[2]SAE straight thread ports are standard and are indicated by port number.

Style H – Dimensional and Mounting Data

Bore Ø	Rod No.	MM Rod Ø	WF	Y	Add Stroke	
					XF	ZF
1.50	1 (std.)	0.625	1.00	2.00	5.63	6.00
	2	1.000	1.38	2.38	6.00	6.38
2.00	1 (std.)	1.000	1.38	2.38	6.00	6.63
	2	1.375	1.63	2.63	6.25	6.88
2.50	1 (std.)	1.000	1.38	2.38	6.13	6.75
	2	1.750	1.88	2.88	6.63	7.25
	3	1.375	1.63	2.63	6.38	7.00
3.25	1 (std.)	1.375	1.63	2.75	7.13	7.88
	2	2.000	2.00	3.13	7.50	8.25
	3	1.750	1.88	3.00	7.38	8.13
4.00	1 (std.)	1.750	1.88	3.00	7.63	8.50
	2	2.500	2.25	3.38	8.00	8.88
	3	2.000	2.00	3.13	7.75	8.63
5.00	1 (std.)	2.000	2.00	3.13	8.25	9.13
	2	3.500	2.25	3.38	8.50	9.38
	3	2.500	2.25	3.38	8.50	9.38
	4	3.000	2.25	3.38	8.50	9.38
6.00	1 (std.)	2.500	2.25	3.50	9.63	10.63
	2	4.000	2.25	3.50	9.63	10.63
	3	3.000	2.25	3.50	9.63	10.63
	4	3.500	2.25	3.50	9.63	10.63

Style H – Maximum Operating Pressure / 2HD

Bore Ø	Maximum psi Pull[3]			
	Rod Code			
	1	2	3	4
1.50	2500	3000	-	-
2.00	3000	3000	-	-
2.50	3000	3000	3000	-
3.25	3000	3000	3000	-
4.00	3000	3000	3000	-
5.00	2000	3000	2000	2500
6.00	1800	2500	2000	2000

[3] Maximum pressure rating — pull application.

⚠**PROP 65 WARNING** **WARNING:** This product can expose you to chemicals including **Lead and Lead Compounds** which are known to the State of California to cause cancer and birth defects or other reproductive harm. For more information go to www.P65Warnings.ca.gov

Cap Square Flange Mounting
Style HB
(NFPA Style MF6)

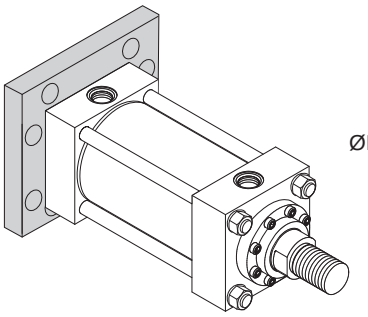

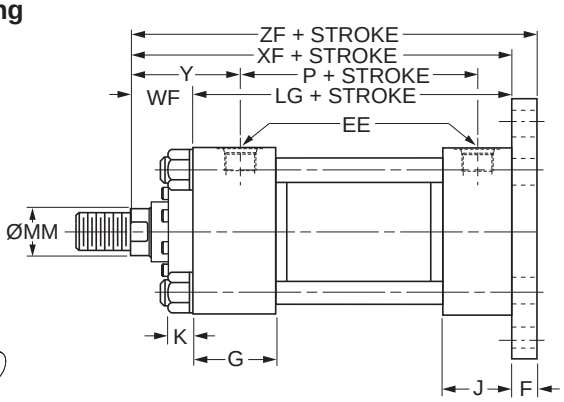

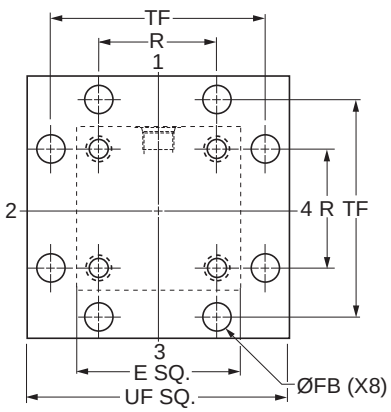

Style HB – Dimensional and Mounting Data

Bore Ø	E	EE		F	FB Ø	G	J	K Max.	R	TF	UF	Add Stroke	
		NPTF[1]	SAE[2]									LG	P
1.50	2.50	1/2	10	0.38	0.44	1.75	1.50	0.42	1.63	3.44	4.25	4.63	2.88
2.00	3.00	1/2	10	0.63	0.56	1.75	1.50	0.57	2.05	4.13	5.13	4.63	2.88
2.50	3.50	1/2	10	0.63	0.56	1.75	1.50	0.57	2.55	4.63	5.63	4.75	3.00
3.25	4.50	3/4	12	0.75	0.69	2.00	1.75	0.68	3.25	5.88	7.13	5.50	3.50
4.00	5.00	3/4	12	0.88	0.69	2.00	1.75	0.68	3.82	6.38	7.63	5.75	3.75
5.00	6.50	3/4	12	0.88	0.94	2.00	1.75	0.94	4.95	8.19	9.75	6.25	4.25
6.00	7.50	1	16	1.00	1.06	2.25	2.25	1.05	5.73	9.44	11.25	7.38	4.88

[1]NPTF ports are available at no extra charge.
[2]SAE straight thread ports are standard and are indicated by port number.

Style HB – Dimensional and Mounting Data

Bore Ø	Rod No.	MM Rod Ø	WF	Y	Add Stroke	
					XF	ZF
1.50	1 (std.)	0.625	1.00	2.00	5.63	6.00
	2	1.000	1.38	2.38	6.00	6.38
2.00	1 (std.)	1.000	1.38	2.38	6.00	6.63
	2	1.375	1.63	2.63	6.25	6.88
2.50	1 (std.)	1.000	1.38	2.38	6.13	6.75
	2	1.750	1.88	2.88	6.63	7.25
	3	1.375	1.63	2.63	6.38	7.00
3.25	1 (std.)	1.375	1.63	2.75	7.13	7.88
	2	2.000	2.00	3.13	7.50	8.25
	3	1.750	1.88	3.00	7.38	8.13
4.00	1 (std.)	1.750	1.88	3.00	7.63	8.50
	2	2.500	2.25	3.38	8.00	8.88
	3	2.000	2.00	3.13	7.75	8.63
5.00	1 (std.)	2.000	2.00	3.13	8.25	9.13
	2	3.500	2.25	3.38	8.50	9.38
	3	2.500	2.25	3.38	8.50	9.38
	4	3.000	2.25	3.38	8.50	9.38
6.00	1 (std.)	2.500	2.25	3.50	9.63	10.63
	2	4.000	2.25	3.50	9.63	10.63
	3	3.000	2.25	3.50	9.63	10.63
	4	3.500	2.25	3.50	9.63	10.63

⚠**PROP 65 WARNING** **WARNING:** This product can expose you to chemicals including **Lead and Lead Compounds** which are known to the State of California to cause cancer and birth defects or other reproductive harm. For more information go to www.P65Warnings.ca.gov

Cap Rectangular Flange Mounting
Style HH
(NFPA Style ME6)

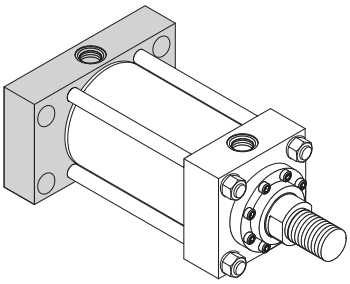

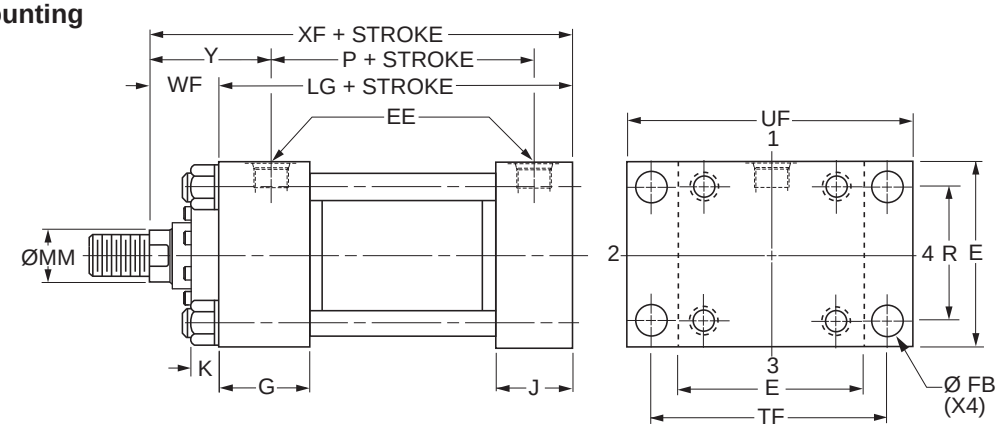

Style HH – Dimensional and Mounting Data

Bore Ø	E	EE		FB Ø	G	J	K Max.	R	TF	UF	Add Stroke	
		NPTF[1]	SAE[2]								LG	P
1.50	2.50	1/2	10	0.44	1.75	1.50	0.42	1.63	3.44	4.25	4.63	2.88
2.00	3.00	1/2	10	0.56	1.75	1.50	0.57	2.05	4.13	5.13	4.63	2.88
2.50	3.50	1/2	10	0.56	1.75	1.50	0.57	2.55	4.63	5.63	4.75	3.00
3.25	4.50	3/4	12	0.69	2.00	1.75	0.68	3.25	5.88	7.13	5.50	3.50
4.00	5.00	3/4	12	0.69	2.00	1.75	0.68	3.82	6.38	7.63	5.75	3.75
5.00	6.50	3/4	12	0.94	2.00	1.75	0.94	4.95	8.19	9.75	6.25	4.25
6.00	7.50	1	16	1.06	2.25	2.25	1.05	5.73	9.44	11.25	7.38	4.88

[1]NPTF ports are available at no extra charge.
[2]SAE straight thread ports are standard and are indicated by port number.

Style HH – Dimensional and Mounting Data

Bore Ø	Rod No.	MM Rod Ø	WF	Y	Add Stroke
					XF
1.50	1 (std.)	0.625	1.00	2.00	5.63
	2	1.000	1.38	2.38	6.00
2.00	1 (std.)	1.000	1.38	2.38	6.00
	2	1.375	1.63	2.63	6.25
2.50	1 (std.)	1.000	1.38	2.38	6.13
	2	1.750	1.88	2.88	6.63
	3	1.375	1.63	2.63	6.38
3.25	1 (std.)	1.375	1.63	2.75	7.13
	2	2.000	2.00	3.13	7.50
	3	1.750	1.88	3.00	7.38
4.00	1 (std.)	1.750	1.88	3.00	7.63
	2	2.500	2.25	3.38	8.00
	3	2.000	2.00	3.13	7.75
5.00	1 (std.)	2.000	2.00	3.13	8.25
	2	3.500	2.25	3.38	8.50
	3	2.500	2.25	3.38	8.50
	4	3.000	2.25	3.38	8.50
6.00	1 (std.)	2.500	2.25	3.50	9.63
	2	4.000	2.25	3.50	9.63
	3	3.000	2.25	3.50	9.63
	4	3.500	2.25	3.50	9.63

⚠**PROP 65 WARNING** **WARNING:** This product can expose you to chemicals including **Lead and Lead Compounds** which are known to the State of California to cause cancer and birth defects or other reproductive harm. For more information go to www.P65Warnings.ca.gov

Side Lug Mounting
Style C
(NFPA Style MS2)

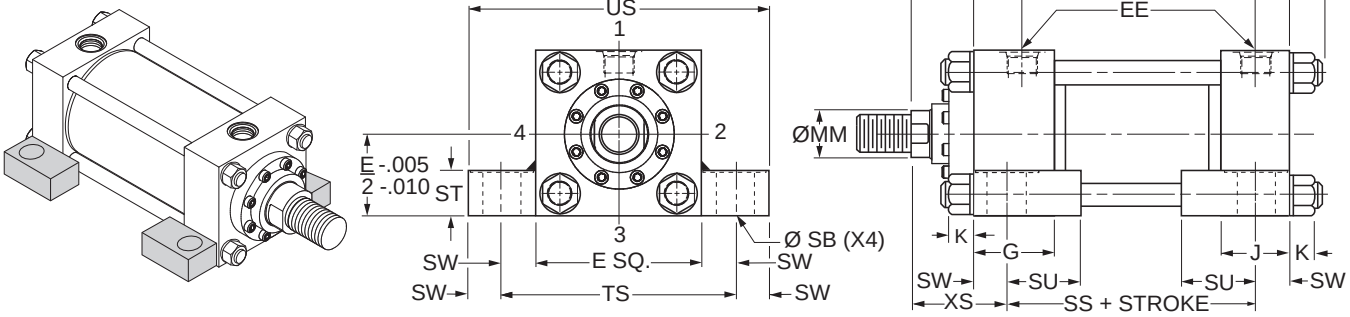

Style C – Dimensional and Mounting Data

Bore Ø	E	EE		G	J	K Max.	SB[3] Ø	ST	SU	SW	TS	US	Add Stroke		
		NPTF[1]	SAE[2]										LG	P	SS
1.50	2.50	1/2	10	1.75	1.50	0.42	0.44	0.50	0.94	0.38	3.25	4.00	4.63	2.88	3.88
2.00	3.00	1/2	10	1.75	1.50	0.57	0.56	0.75	1.25	0.50	4.00	5.00	4.63	2.88	3.63
2.50	3.50	1/2	10	1.75	1.50	0.57	0.81	1.00	1.56	0.69	4.88	6.25	4.75	3.00	3.38
3.25	4.50	3/4	12	2.00	1.75	0.68	0.81	1.00	1.56	0.69	5.88	7.25	5.50	3.50	4.13
4.00	5.00	3/4	12	2.00	1.75	0.68	1.06	1.25	2.00	0.88	6.75	8.50	5.75	3.75	4.00
5.00	6.50	3/4	12	2.00	1.75	0.94	1.06	1.25	2.00	0.88	8.25	10.00	6.25	4.25	4.50
6.00	7.50	1	16	2.25	2.25	1.05	1.31	1.50	2.50	1.13	9.75	12.00	7.38	4.88	5.13

[1]NPTF ports are available at no extra charge.
[2]SAE straight thread ports are standard and are indicated by port number.
[3]Upper surface spot faced for socket head screws.

Style C – Dimensional and Mounting Data

Bore Ø	Rod No.	MM Rod Ø	WF	XS	Y	Add Stroke
						ZB Max.
1.50	1 (std.)	0.625	1.00	1.38	2.00	6.29
	2	1.000	1.38	1.75	2.38	6.67
2.00	1 (std.)	1.000	1.38	1.88	2.38	6.81
	2	1.375	1.63	2.13	2.63	7.06
2.50	1 (std.)	1.000	1.38	2.06	2.38	6.93
	2	1.750	1.88	2.56	2.88	7.43
	3	1.375	1.63	2.31	2.63	7.18
3.25	1 (std.)	1.375	1.63	2.31	2.75	8.06
	2	2.000	2.00	2.69	3.13	8.43
	3	1.750	1.88	2.56	3.00	8.31
4.00	1 (std.)	1.750	1.88	2.75	3.00	8.56
	2	2.500	2.25	3.13	3.38	8.94
	3	2.000	2.00	2.88	3.13	8.68
5.00	1 (std.)	2.000	2.00	2.88	3.13	9.44
	2	3.500	2.25	3.13	3.38	9.69
	3	2.500	2.25	3.13	3.38	9.69
	4	3.000	2.25	3.13	3.38	9.69
6.00	1 (std.)	2.500	2.25	3.38	3.50	10.93
	2	4.000	2.25	3.38	3.50	10.93
	3	3.000	2.25	3.38	3.50	10.93
	4	3.500	2.25	3.38	3.50	10.93

⚠**PROP 65 WARNING** **WARNING:** This product can expose you to chemicals including **Lead and Lead Compounds** which are known to the State of California to cause cancer and birth defects or other reproductive harm. For more information go to www.P65Warnings.ca.gov

Side Tapped Mounting
Style F
(NFPA Style MS4)

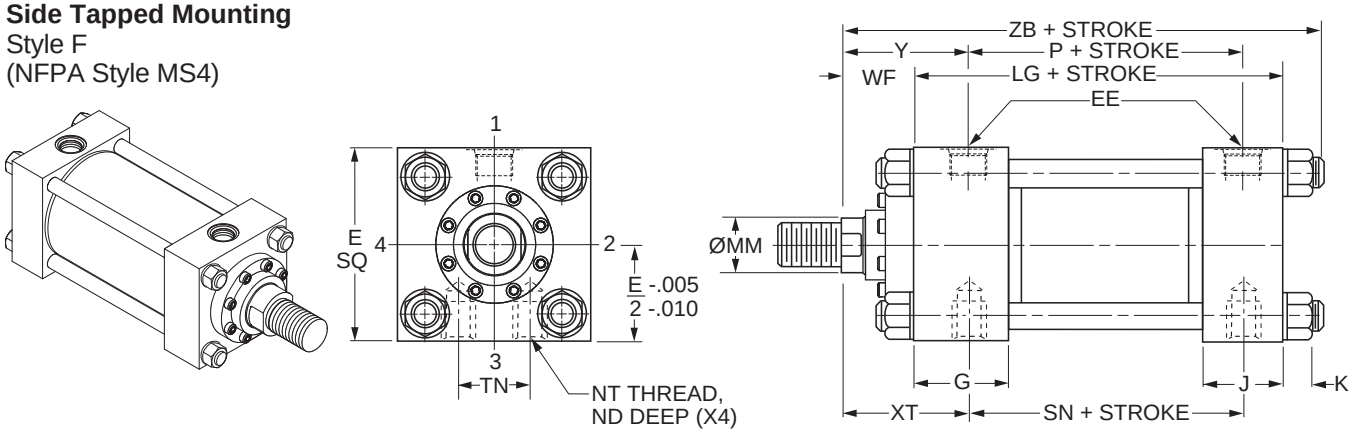

Style F – Dimensional and Mounting Data

Bore Ø	E	EE		G	J	K Max.	ND	NT	TN	Add Stroke		
		NPTF[1]	SAE[2]							LG	P	SN
1.50	2.50	1/2	10	1.75	1.50	0.42	0.38	3/8-16	0.75	4.63	2.88	2.88
2.00	3.00	1/2	10	1.75	1.50	0.57	0.44	1/2-13	0.94	4.63	2.88	2.88
2.50	3.50	1/2	10	1.75	1.50	0.57	0.50	5/8-11	1.31	4.75	3.00	3.00
3.25	4.50	3/4	12	2.00	1.75	0.68	0.69	3/4-10	1.50	5.50	3.50	3.50
4.00	5.00	3/4	12	2.00	1.75	0.68	0.69	1-8	2.06	5.75	3.75	3.75
5.00	6.50	3/4	12	2.00	1.75	0.94	1.00	1-8	2.94	6.25	4.25	4.25
6.00	7.50	1	16	2.25	2.25	1.05	1.25	1 1/4 -7	3.31	7.38	4.88	5.13

[1]NPTF ports are available at no extra charge.
[2]SAE straight thread ports are standard and are indicated by port number.

Style F – Dimensional and Mounting Data

Bore Ø	Rod No.	MM Rod Ø	WF	XT	Y	Add Stroke
						ZB Max.
1.50	1 (std.)	0.625	1.00	2.00	2.00	6.29
	2	1.000	1.38	2.38	2.38	6.67
2.00	1 (std.)	1.000	1.38	2.38	2.38	6.81
	2	1.375	1.63	2.63	2.63	7.06
2.50	1 (std.)	1.000	1.38	2.38	2.38	6.93
	2	1.750	1.88	2.88	2.88	7.43
	3	1.375	1.63	2.63	2.63	7.18
3.25	1 (std.)	1.375	1.63	2.75	2.75	8.06
	2	2.000	2.00	3.13	3.13	8.43
	3	1.750	1.88	3.00	3.00	8.31
4.00	1 (std.)	1.750	1.88	3.00	3.00	8.56
	2	2.500	2.25	3.38	3.38	8.94
	3	2.000	2.00	3.13	3.13	8.68
5.00	1 (std.)	2.000	2.00	3.13	3.13	9.44
	2	3.500	2.25	3.38	3.38	9.69
	3	2.500	2.25	3.38	3.38	9.69
	4	3.000	2.25	3.38	3.38	9.69
6.00	1 (std.)	2.500	2.25	3.50	3.50	10.93
	2	4.000	2.25	3.50	3.50	10.93
	3	3.000	2.25	3.50	3.50	10.93
	4	3.500	2.25	3.50	3.50	10.93

⚠**PROP 65 WARNING** **WARNING:** This product can expose you to chemicals including **Lead and Lead Compounds** which are known to the State of California to cause cancer and birth defects or other reproductive harm. For more information go to www.P65Warnings.ca.gov

Cap Fixed Clevis Mounting
Style BB
(NFPA Style MP1)

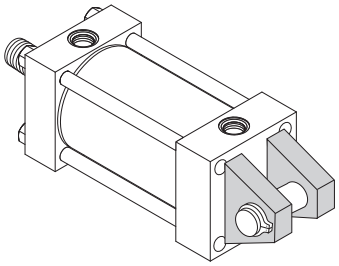

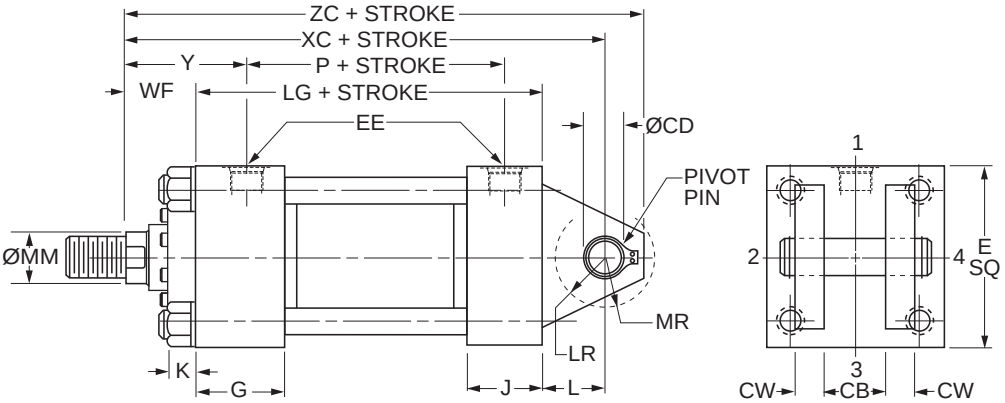

Style BB – Dimensional and Mounting Data

Bore Ø	E	EE		CB	CD[3] Ø +.000 -.002	CW	G	J	K Max.	L	LR	MR	Add Stroke	
		NPTF[1]	SAE[2]										LG	P
1.50	2.50	1/2	10	0.75	.501	0.50	1.75	1.50	0.42	0.75	0.56	0.63	4.63	2.88
2.00	3.00	1/2	10	1.25	.751	0.63	1.75	1.50	0.57	1.25	1.00	0.94	4.63	2.88
2.50	3.50	1/2	10	1.25	.751	0.63	1.75	1.50	0.57	1.25	0.94	0.94	4.75	3.00
3.25	4.50	3/4	12	1.50	1.001	0.75	2.00	1.75	0.68	1.50	1.25	1.19	5.50	3.50
4.00	5.00	3/4	12	2.00	1.376	1.00	2.00	1.75	0.68	2.13	1.75	1.63	5.75	3.75
5.00	6.50	3/4	12	2.50	1.751	1.25	2.00	1.75	0.94	2.25	2.06	2.13	6.25	4.25
6.00	7.50	1	16	2.50	2.001	1.25	2.25	2.25	1.05	2.50	2.31	2.38	7.38	4.88

[1]NPTF ports are available at no extra charge.
[2]SAE straight thread ports are standard and are indicated by port number.
[3]Diameter CD is Pin Diameter.

Style BB – Dimensional and Mounting Data

Bore Ø	Rod No.	MM Rod Ø	WF	Y	Add Stroke	
					XC	ZC
1.50	1 (std.)	0.625	1.00	2.00	6.38	6.88
	2	1.000	1.38	2.38	6.75	7.25
2.00	1 (std.)	1.000	1.38	2.38	7.25	8.00
	2	1.375	1.63	2.63	7.50	8.25
2.50	1 (std.)	1.000	1.38	2.38	7.38	8.13
	2	1.750	1.88	2.88	7.88	8.63
	3	1.375	1.63	2.63	7.63	8.38
3.25	1 (std.)	1.375	1.63	2.75	8.63	9.63
	2	2.000	2.00	3.13	9.00	10.00
	3	1.750	1.88	3.00	8.88	9.88
4.00	1 (std.)	1.750	1.88	3.00	9.75	11.13
	2	2.500	2.25	3.38	10.13	11.50
	3	2.000	2.00	3.13	9.88	11.25
5.00	1 (std.)	2.000	2.00	3.13	10.50	12.25
	2	3.500	2.25	3.38	10.75	12.50
	3	2.500	2.25	3.38	10.75	12.50
	4	3.000	2.25	3.38	10.75	12.50
6.00	1 (std.)	2.500	2.25	3.50	12.13	14.13
	2	4.000	2.25	3.50	12.13	14.13
	3	3.000	2.25	3.50	12.13	14.13
	4	3.500	2.25	3.50	12.13	14.13

⚠**PROP 65 WARNING** **WARNING:** This product can expose you to chemicals including **Lead and Lead Compounds** which are known to the State of California to cause cancer and birth defects or other reproductive harm. For more information go to www.P65Warnings.ca.gov

Head Trunnion Mounting
Style D
(NFPA Style MT1)

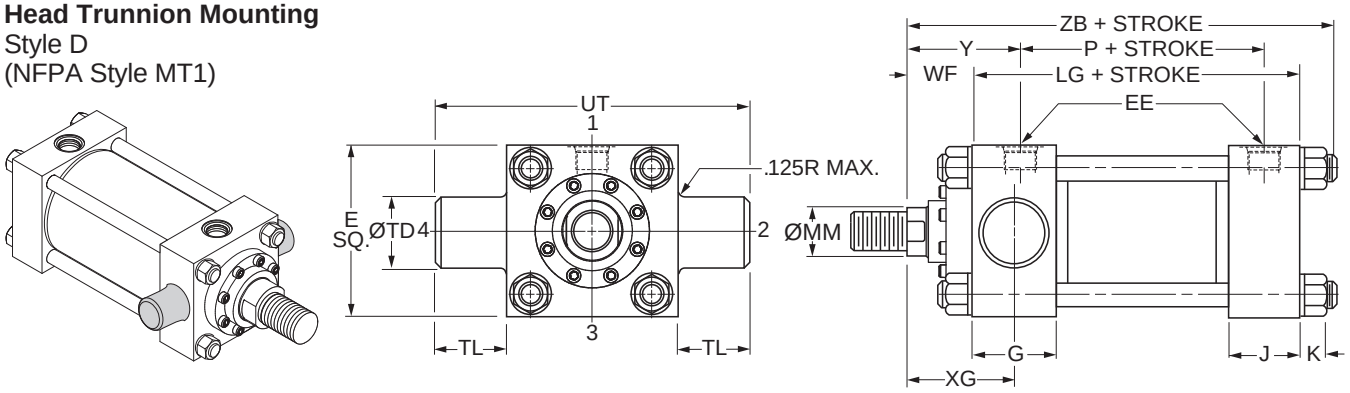

Style D – Dimensional and Mounting Data

Bore Ø	E	EE		G	J	K Max.	TD Ø +.000 -.001	TL	UT	Add Stroke	
		NPTF[1]	SAE[2]							LG	P
1.50	2.50	1/2	10	1.75	1.50	0.42	1.000	1.00	4.50	4.63	2.88
2.00	3.00	1/2	10	1.75	1.50	0.57	1.375	1.38	5.75	4.63	2.88
2.50	3.50	1/2	10	1.75	1.50	0.57	1.375	1.38	6.25	4.75	3.00
3.25	4.50	3/4	12	2.00	1.75	0.68	1.750	1.75	8.00	5.50	3.50
4.00	5.00	3/4	12	2.00	1.75	0.68	1.750	1.75	8.50	5.75	3.75
5.00	6.50	3/4	12	2.00	1.75	0.94	1.750	1.75	10.00	6.25	4.25
6.00	7.50	1	16	2.25	2.25	1.05	2.000	2.00	11.50	7.38	4.88

[1]NPTF ports are available at no extra charge.
[2]SAE straight thread ports are standard and are indicated by port number.

Style D – Dimensional and Mounting Data

Bore Ø	Rod No.	MM Rod Ø	WF	XG	Y	Add Stroke
						ZB Max.
1.50	1 (std.)	0.625	1.00	1.88	2.00	6.29
	2	1.000	1.38	2.25	2.38	6.67
2.00	1 (std.)	1.000	1.38	2.25	2.38	6.81
	2	1.375	1.63	2.50	2.63	7.06
2.50	1 (std.)	1.000	1.38	2.25	2.38	6.93
	2	1.750	1.88	2.75	2.88	7.43
	3	1.375	1.63	2.50	2.63	7.18
3.25	1 (std.)	1.375	1.63	2.63	2.75	8.06
	2	2.000	2.00	3.00	3.13	8.43
	3	1.750	1.88	2.88	3.00	8.31
4.00	1 (std.)	1.750	1.88	2.88	3.00	8.56
	2	2.500	2.25	3.25	3.38	8.94
	3	2.000	2.00	3.00	3.13	8.68
5.00	1 (std.)	2.000	2.00	3.00	3.13	9.44
	2	3.500	2.25	3.25	3.38	9.69
	3	2.500	2.25	3.25	3.38	9.69
	4	3.000	2.25	3.25	3.38	9.69
6.00	1 (std.)	2.500	2.25	3.38	3.50	10.93
	2	4.000	2.25	3.38	3.50	10.93
	3	3.000	2.25	3.38	3.50	10.93
	4	3.500	2.25	3.38	3.50	10.93

⚠**PROP 65 WARNING** **WARNING:** This product can expose you to chemicals including **Lead and Lead Compounds** which are known to the State of California to cause cancer and birth defects or other reproductive harm. For more information go to www.P65Warnings.ca.gov

Cap Trunnion Mounting
Style DB
(NFPA Style MT2)

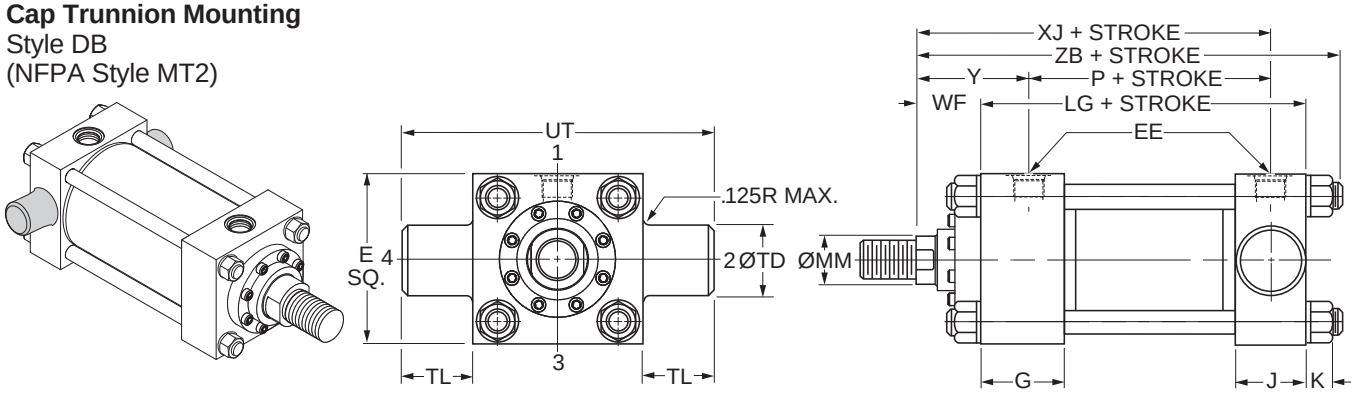

Style DB – Dimensional and Mounting Data

Bore Ø	E	EE		G	J	K Max.	TD Ø +.000 -.001	TL	UT	Add Stroke	
		NPTF[1]	SAE[2]							LG	P
1.50	2.50	1/2	10	1.75	1.50	0.42	1.000	1.00	4.50	4.63	2.88
2.00	3.00	1/2	10	1.75	1.50	0.57	1.375	1.38	5.75	4.63	2.88
2.50	3.50	1/2	10	1.75	1.50	0.57	1.375	1.38	6.25	4.75	3.00
3.25	4.50	3/4	12	2.00	1.75	0.68	1.750	1.75	8.00	5.50	3.50
4.00	5.00	3/4	12	2.00	1.75	0.68	1.750	1.75	8.50	5.75	3.75
5.00	6.50	3/4	12	2.00	1.75	0.94	1.750	1.75	10.00	6.25	4.25
6.00	7.50	1	16	2.25	2.25	1.05	2.000	2.00	11.50	7.38	4.88

[1]NPTF ports are available at no extra charge.
[2]SAE straight thread ports are standard and are indicated by port number.

Style DB – Dimensional and Mounting Data

Bore Ø	Rod No.	MM Rod Ø	WF	Y	Add Stroke	
					XJ	ZB Max.
1.50	1 (std.)	0.625	1.00	2.00	4.88	6.29
	2	1.000	1.38	2.38	5.25	6.67
2.00	1 (std.)	1.000	1.38	2.38	5.25	6.81
	2	1.375	1.63	2.63	5.50	7.06
2.50	1 (std.)	1.000	1.38	2.38	5.38	6.93
	2	1.750	1.88	2.88	5.88	7.43
	3	1.375	1.63	2.63	5.63	7.18
3.25	1 (std.)	1.375	1.63	2.75	6.25	8.06
	2	2.000	2.00	3.13	6.63	8.43
	3	1.750	1.88	3.00	6.50	8.31
4.00	1 (std.)	1.750	1.88	3.00	6.75	8.56
	2	2.500	2.25	3.38	7.13	8.94
	3	2.000	2.00	3.13	6.88	8.68
5.00	1 (std.)	2.000	2.00	3.13	7.38	9.44
	2	3.500	2.25	3.38	7.63	9.69
	3	2.500	2.25	3.38	7.63	9.69
	4	3.000	2.25	3.38	7.63	9.69
6.00	1 (std.)	2.500	2.25	3.50	8.38	10.93
	2	4.000	2.25	3.50	8.38	10.93
	3	3.000	2.25	3.50	8.38	10.93
	4	3.500	2.25	3.50	8.38	10.93

⚠**PROP 65 WARNING** **WARNING:** This product can expose you to chemicals including **Lead and Lead Compounds** which are known to the State of California to cause cancer and birth defects or other reproductive harm. For more information go to www.P65Warnings.ca.gov

Intermediate Fixed Trunnion Mounting
Style DD
(NFPA Style MT4)

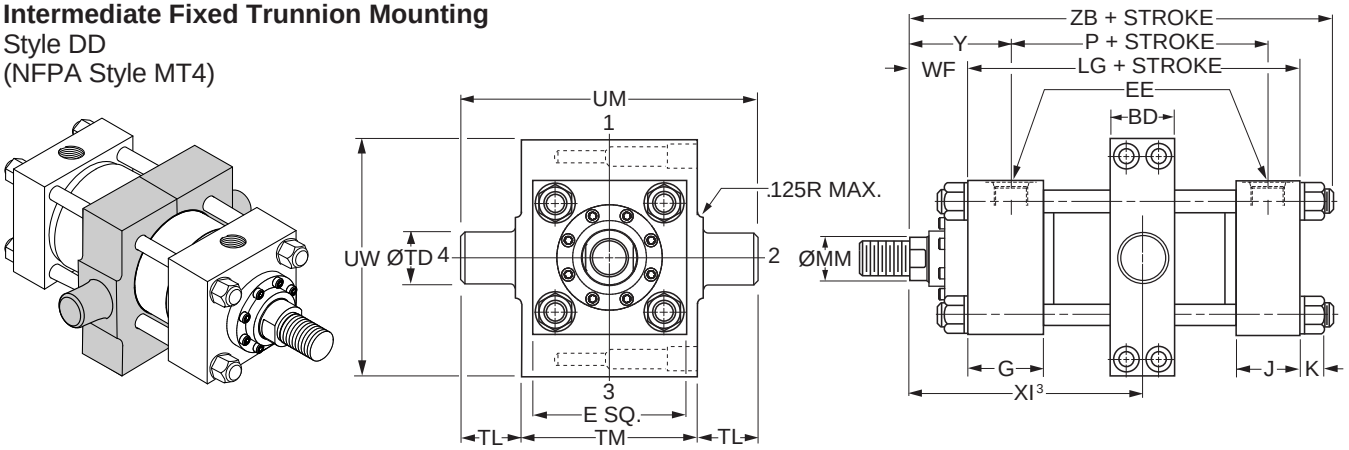

Style DD – Dimensional and Mounting Data

Bore Ø	BD	E	EE		G	J	K Max.	TD Ø +.000 -.001	TL	TM	UM	UW	Add Stroke	
			NPTF[1]	SAE[2]									LG	P
1.50	1.25	2.50	1/2	10	1.75	1.50	0.42	1.000	1.00	3.00	5.00	3.38	4.63	2.88
2.00	1.50	3.00	1/2	10	1.75	1.50	0.57	1.375	1.38	3.50	6.25	4.13	4.63	2.88
2.50	1.50	3.50	1/2	10	1.75	1.50	0.57	1.375	1.38	4.00	6.75	4.63	4.75	3.00
3.25	2.00	4.50	3/4	12	2.00	1.75	0.68	1.750	1.75	5.00	8.50	5.81	5.50	3.50
4.00	2.00	5.00	3/4	12	2.00	1.75	0.68	1.750	1.75	5.50	9.00	6.38	5.75	3.75
5.00	2.00	6.50	3/4	12	2.00	1.75	0.94	1.750	1.75	7.00	10.50	7.75	6.25	4.25
6.00	3.00	7.50	1	16	2.25	2.25	1.05	2.000	2.00	8.50	12.50	10.38	7.38	4.88

[1]NPTF ports are available at no extra charge. [2]SAE straight thread ports are standard and are indicated by port number.

Style DD – Dimensional and Mounting Data

Bore Ø	Rod No.	MM Rod Ø	WF	Y	Minimum XI[3]		Style DD Min. Stroke	Add Stroke		
					Styles 4, 8 & 9	Style 55		Maximum XI[4]		ZB Max
								Styles 4, 8 & 9	Style 55	
1.50	1 (std.)	0.625	1.00	2.00	3.44	4.19	0	3.44	4.19	6.29
	2	1.000	1.38	2.38	3.81	4.81	0	3.81	4.81	6.67
2.00	1 (std.)	1.000	1.38	2.38	3.94	4.94	0.25	3.69	4.69	6.81
	2	1.375	1.63	2.63	4.19	5.31	0.25	3.94	5.06	7.06
2.50	1 (std.)	1.000	1.38	2.38	3.94	4.94	0.13	3.81	4.81	6.93
	2	1.750	1.88	2.88	4.44	5.69	0.13	4.31	5.56	7.43
	3	1.375	1.63	2.63	4.19	5.31	0.13	4.06	5.19	7.18
3.25	1 (std.)	1.375	1.63	2.75	4.69	5.81	0.38	4.31	5.44	8.06
	2	2.000	2.00	3.13	5.06	6.81	0.38	4.69	6.44	8.43
	3	1.750	1.88	3.00	4.94	6.19	0.38	4.56	5.81	8.31
4.00	1 (std.)	1.750	1.88	3.00	4.94	6.19	0.13	4.81	6.06	8.56
	2	2.500	2.25	3.38	5.31	7.56	0.13	5.19	7.44	8.94
	3	2.000	2.00	3.13	5.06	6.81	0.13	4.94	6.69	8.68
5.00	1 (std.)	2.000	2.00	3.13	5.06	6.81	0	5.44	7.19	9.44
	2	3.500	2.25	3.38	5.31	8.69	0	5.69	9.06	9.69
	3	2.500	2.25	3.38	5.31	7.56	0	5.69	7.94	9.69
	4	3.000	2.25	3.38	5.31	7.94	0	5.69	8.31	9.69
6.00	1 (std.)	2.500	2.25	3.50	6.06	8.31	0.25	5.81	8.06	10.93
	2	4.000	2.25	3.50	6.06	9.56	0.25	5.81	9.31	10.93
	3	3.000	2.25	3.50	6.06	8.69	0.25	5.81	8.44	10.93
	4	3.500	2.25	3.50	6.06	9.44	0.25	5.81	9.19	10.93

[3]Dimension XI to be specified by customer. Reference point for rod end Style 55 is end of piston rod.
[4]Dimensions shown are valid for standard WF and WG dimension.

⚠**PROP 65 WARNING** **WARNING:** This product can expose you to chemicals including **Lead and Lead Compounds** which are known to the State of California to cause cancer and birth defects or other reproductive harm. For more information go to www.P65Warnings.ca.gov

Heavy Duty Intermediate Fixed Trunnion Mounting

Style DE
(NFPA Style MT4)

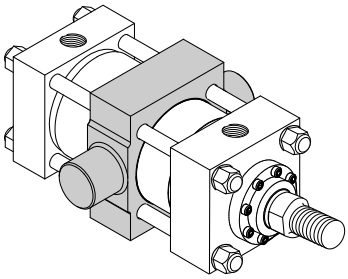

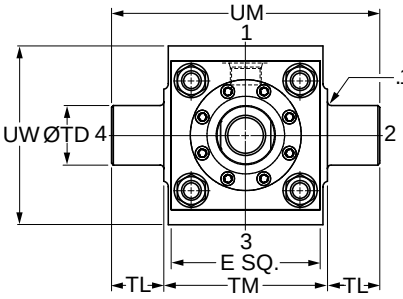

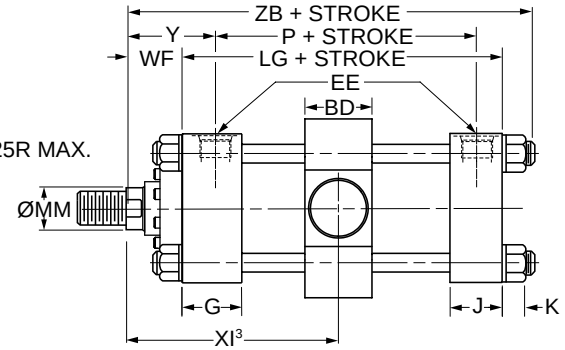

Style DE – Dimensional and Mounting Data

Bore Ø	BD	E	EE		G	J	K Max.	TD Ø +.000 -.001	TL	TM	UM	UW	Add Stroke	
			NPTF[1]	SAE[2]									LG	P
4.00	2.25	5.00	3/4	12	2.00	1.75	0.68	2.000	1.75	5.50	9.00	6.00	5.75	3.75
5.00	2.75	6.50	3/4	12	2.00	1.75	0.94	2.500	1.75	7.00	10.50	7.50	6.25	4.25
6.00	3.25	7.50	1	16	2.25	2.25	1.05	3.000	2.00	8.50	12.50	9.50	7.38	4.88

[1]NPTF ports are available at no extra charge.
[2]SAE straight thread ports are standard and are indicated by port number.

Style DE – Dimensional and Mounting Data

Bore Ø	Rod No.	MM Rod Ø	WF	Y	Minimum XI[3]		Style DE Minimum Stroke	Add Stroke		
					Styles 4, 8 & 9	Style 55		Maximum XI[4]		ZB Max.
								Styles 4, 8 & 9	Style 55	
4.00	1 (std.)	1.750	1.88	3.00	5.06	6.31	0.38	4.69	5.94	8.56
	2	2.500	2.25	3.38	5.44	7.69	0.38	5.06	7.31	8.94
	3	2.000	2.00	3.13	5.19	6.94	0.38	4.81	6.56	8.68
5.00	1 (std.)	2.000	2.00	3.13	5.44	7.19	0.38	5.06	6.81	9.44
	2	3.500	2.25	3.38	5.69	9.06	0.38	5.31	8.69	9.69
	3	2.500	2.25	3.38	5.69	7.94	0.38	5.31	7.56	9.69
	4	3.000	2.25	3.38	5.69	8.31	0.38	5.31	7.94	9.69
6.00	1 (std.)	2.500	2.25	3.50	6.19	8.44	0.50	5.69	7.94	10.93
	2	4.000	2.25	3.50	6.19	9.69	0.50	5.69	9.19	10.93
	3	3.000	2.25	3.50	6.19	8.81	0.50	5.69	8.31	10.93
	4	3.500	2.25	3.50	6.19	9.56	0.50	5.69	9.06	10.93

[3]Dimension XI to be specified by customer. Reference point for rod end Style 55 is end of piston rod.
[4]Dimensions shown are valid for standard WF and WG dimension.

⚠**PROP 65 WARNING** **WARNING:** This product can expose you to chemicals including **Lead and Lead Compounds** which are known to the State of California to cause cancer and birth defects or other reproductive harm. For more information go to www.P65Warnings.ca.gov

Spherical Bearing Mounting
Style SB

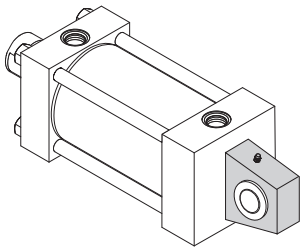

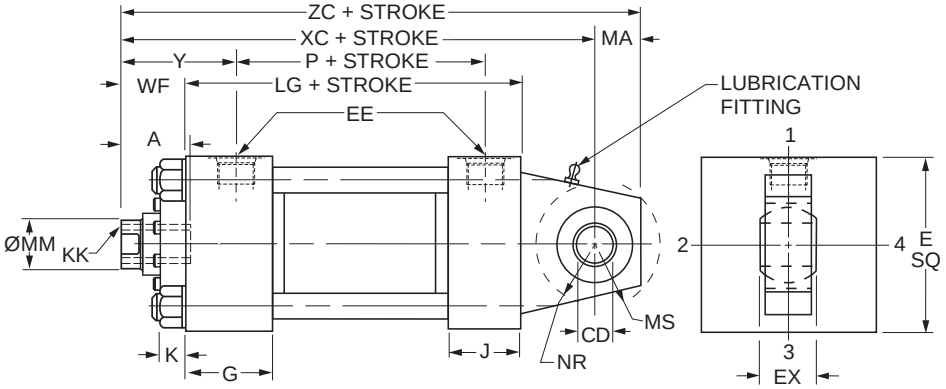

Style SB – Dimensional and Mounting Data

Bore Ø	A	CD[1] Ø +0.0000 -0.0005	E	EE		EX	G	J	K Max.	MA	MS	NR	Add Stroke		Maximum Operating psi[2]
				NPTF	SAE								LG	P	
1.50	0.75	0.5000	2.50	1/2	10	0.44	1.75	1.50	0.42	0.75	0.94	0.63	4.63	2.88	1500
2.00	1.13	0.7500	3.00	1/2	10	0.66	1.75	1.50	0.57	1.00	1.38	1.00	4.63	2.88	2200
2.50	1.13	0.7500	3.50	1/2	10	0.66	1.75	1.50	0.57	1.00	1.38	1.00	4.75	3.00	1450
3.25	1.63	1.0000	4.50	3/4	12	0.88	2.00	1.75	0.68	1.25	1.69	1.25	5.50	3.50	1500
4.00	2.00	1.3750	5.00	3/4	12	1.19	2.00	1.75	0.68	1.88	2.44	1.63	5.75	3.75	1850
5.00	2.25	1.7500	6.50	3/4	12	1.53	2.00	1.75	0.94	2.50	2.88	2.06	6.25	4.25	2000
6.00	3.00	2.0000	7.50	1	16	1.75	2.25	2.25	1.05[3]	2.50	3.31	2.38	7.38	4.88	1800

[1] Diameter CD is hole diameter.
[2] Maximum operating pressure at 4:1 design factor is based on tensile strength of material. Pressure ratings are based on standard bearing ratings.
[3] 6.00" bore is constructed with tie rod nuts on both ends.

Style SB – Dimensional and Mounting Data

Bore Ø	Rod No.	MM Rod Ø	Thread		WF	Y	Add Stroke		
			Style 9 KK[4]	Style 7 KK[4]			XC	XL	ZC
1.50	1 (std.)	0.625	7/16-20	—	1.00	2.00	6.38	7.25	7.13
	2	1.000	—	7/16-20	1.38	2.38	6.75	7.63	7.50
2.00	1 (std.)	1.000	3/4-16	—	1.38	2.38	7.25	8.50	8.25
	2	1.375	—	3/4-16	1.63	2.63	7.50	8.75	8.50
2.50	1 (std.)	1.000	3/4-16	—	1.38	2.38	7.38	8.63	8.38
	2	1.750	—	3/4-16	1.88	2.88	7.88	9.13	8.88
	3	1.375	—	3/4-16	1.63	2.63	7.63	8.88	8.63
3.25	1 (std.)	1.375	1-14	—	1.63	2.75	8.63	10.50	9.88
	2	2.000	—	1-14	2.00	3.13	9.00	10.88	10.25
	3	1.750	—	1-14	1.88	3.00	8.88	10.75	10.13
4.00	1 (std.)	1.750	1 1/4-12	—	1.88	3.00	9.75	11.88	11.63
	2	2.500	—	1 1/4-12	2.25	3.38	10.13	12.25	12.00
	3	2.000	—	1 1/4-12	2.00	3.13	9.88	12.00	11.75
5.00	1 (std.)	2.000	1 1/2-12	—	2.00	3.13	10.50	13.00	13.00
	2	3.500	—	1 1/2-12	2.25	3.38	10.75	13.25	13.25
	3	2.500	—	1 1/2-12	2.25	3.38	10.75	13.25	13.25
	4	3.000	—	1 1/2-12	2.25	3.38	10.75	13.25	13.25
6.00	1 (std.)	2.500	1 7/8-12	—	2.25	3.50	12.13	14.88	14.63
	2	4.000	—	1 7/8-12	2.25	3.50	12.13	14.88	14.63
	3	3.000	—	1 7/8-12	2.25	3.50	12.13	14.88	14.63
	4	3.500	—	1 7/8-12	2.25	3.50	12.13	14.88	14.63

Style SB – Recommended maximum swivel angle on each side of the cylinder centerline.

Bore Ø	Head End Mounted		Cap End Mounted	
	Angle a	Tan. of a	Angle a	Tan. of a
1.50	2.00°	.035	2.00°	.035
2.00	2.50°	.044	4.50°	.079
2.50	2.50°	.044	4.50°	.079
3.25	3.00°	.052	3.00°	.052
4.00	2.50°	.044	3.00°	.052
5.00	3.00°	.052	3.00°	.052
6.00	3.00°	.052	3.00°	.052

Note: Dimension X is the maximum off center mounting of the cylinder. To determine dimension X for various stroke lengths multiply the distance between pivot pin holes by tangent of angle a. For extended position use X = XL + 2X stroke.

Mounting Information
Head End Mounting

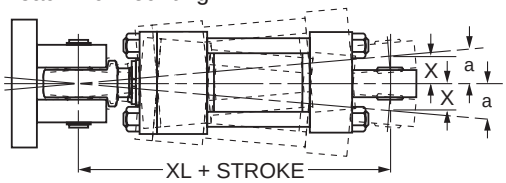

Cap End Mounting

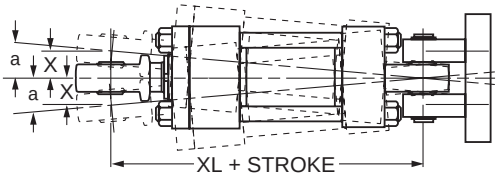

[4] Style 9 and Style 7 threads listed are for a spherical rod eye (sold separately) with pin diameter that matches the cap pin.

⚠PROP 65 WARNING **WARNING:** This product can expose you to chemicals including **Lead and Lead Compounds** which are known to the State of California to cause cancer and birth defects or other reproductive harm. For more information go to www.P65Warnings.ca.gov

Spherical Bearing Mounting
Style SE

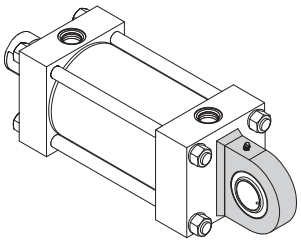

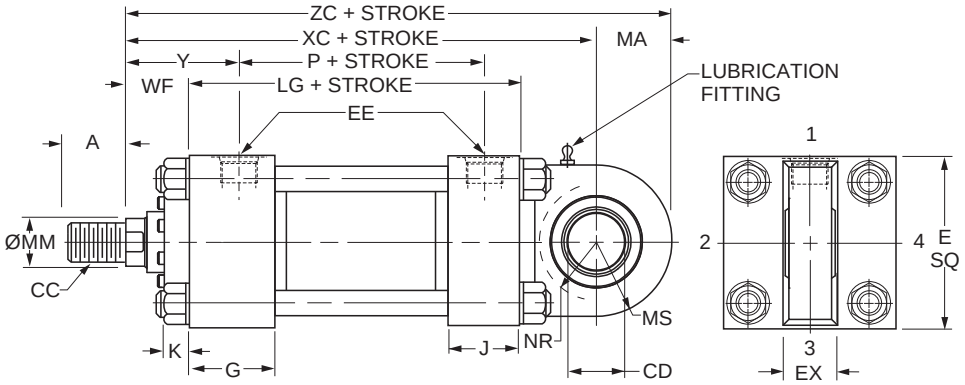

Style SE – Dimensional and Mounting Data

Bore Ø	A	CD[1] Ø	E	EE		EX	G	J	K Max.	MA	MS	NR	Add Stroke	
				NPTF	SAE								LG	P
1.50	0.75	0.7500 -0.0005	2.50	1/2	10	0.66	1.75	1.50	0.42	1.00	1.00	0.75	4.63	2.88
2.00	1.13	1.0000 -0.0005	3.00	1/2	10	0.88	1.75	1.50	0.57	1.25	1.25	1.00	4.63	2.88
2.50	1.13	1.2500 -0.0005	3.50	1/2	10	1.09	1.75	1.50	0.57	1.50	1.50	1.31	4.75	3.00
3.25	1.63	1.5000 -0.0005	4.50	3/4	12	1.31	2.00	1.75	0.68	2.00	2.00	1.75	5.50	3.50
4.00	2.00	2.0000 -0.0005	5.00	3/4	12	1.75	2.00	1.75	0.68	2.25	2.25	2.13	5.75	3.75
5.00	2.25	2.5000 -0.0006	6.50	3/4	12	2.19	2.00	1.75	0.94	3.00	3.00	2.75	6.25	4.25
6.00	3.00	3.0000 -0.0006	7.50	1	16	2.63	2.25	2.25	1.05	3.50	3.50	3.13	7.38	4.88

[1] Diameter CD is hole diameter. [2] Maximum operating pressure at 4:1 design factor is based on tensile strength of material. Pressure ratings are based on standard bearing ratings.

Style SE – Dimensional and Mounting Data

Bore Ø	Rod No.	MM Rod Ø	Thread Style 8 CC[3]	A	WF	Y	Add Stroke		
							XC	XL	ZC
1.50	1 (std.)	0.625	1/2-20	0.75	1.00	2.00	6.88	9.01	7.88
	2	1.000	[3]	[3]	1.38	2.38	7.25	9.38	8.25
2.00	1 (std.)	1.000	7/8-14	1.13	1.38	2.38	7.56	10.56	8.81
	2	1.375	[3]	[3]	1.63	2.63	7.81	10.81	9.06
2.50	1 (std.)	1.000	7/8-14	1.13	1.38	2.38	7.75	10.75	9.25
	2	1.750	[3]	[3]	1.88	2.88	8.25	11.25	9.75
	3	1.375	[3]	[3]	1.63	2.63	8.00	11.00	9.50
3.25	1 (std.)	1.375	1 1/4-12	1.63	1.63	2.75	9.25	13.38	11.25
	2	2.000	[3]	[3]	2.00	3.13	9.63	13.75	11.63
	3	1.750	[3]	[3]	1.88	3.00	9.50	13.63	11.50
4.00	1 (std.)	1.750	1 1/2-12	2.00	1.88	3.00	10.13	15.13	12.38
	2	2.500	[3]	[3]	2.25	3.38	10.50	15.50	12.75
	3	2.000	[3]	[3]	2.00	3.13	10.25	15.25	12.50
5.00	1 (std.)	2.000	1 3/4-12	2.25	2.00	3.13	11.50	17.25	14.50
	2	3.500	[3]	[3]	2.25	3.38	11.75	17.50	14.75
	3	2.500	[3]	[3]	2.25	3.38	11.75	17.50	14.75
	4	3.000	[3]	[3]	2.25	3.38	11.75	17.50	14.75
6.00	1 (std.)	2.500	2 1/4-12	3.00	2.25	3.50	13.38	20.38	16.88
	2	4.000	[3]	[3]	2.25	3.50	13.38	20.38	16.88
	3	3.000	[3]	[3]	2.25	3.50	13.38	20.38	16.88
	4	3.500	[3]	[3]	2.25	3.50	13.38	20.38	16.88

Style SE – Recommended maximum swivel angle on each side of the cylinder centerline.

Bore Ø	Head End Mounted		Cap End Mounted	
	Angle a	Tan. of a	Angle a	Tan. of a
1.50	2.50°	0.044	3.00°	0.052
2.00	3.00°	0.052	3.00°	0.052
2.50	3.00°	0.052	3.00°	0.052
3.25	3.00°	0.052	2.75°	0.048
4.00	3.00°	0.052	3.00°	0.052
5.00	3.00°	0.052	3.00°	0.052
6.00	3.00°	0.052	3.00°	0.052

Note: Dimension X is the maximum off center mounting of the cylinder. To determine dimension X for various stroke lengths multiply the distance between pivot pin holes by tangent of angle a. For extended position use X = XL + 2X stroke.

Mounting Information

Head End Mounting

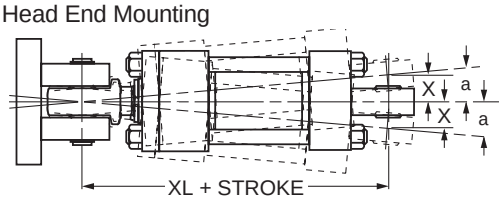

Cap End Mounting

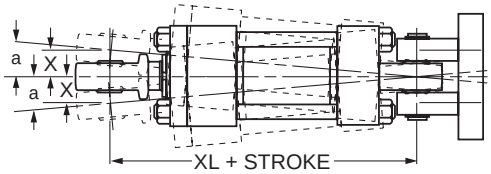

[3] To match pin diameter in rod eye and cap, when an oversize rod is required, specify rod end style '3', 'CC' thread and 'A' thread length for the standard rod diameter (Rod No. 1 for the bore), and 'WF' for the oversize rod. Order the rod eye and clevis bracket for the required bore size from the tables on the Style SE Spherical Bearing Accessories page.

⚠PROP 65 WARNING **WARNING:** This product can expose you to chemicals including **Lead and Lead Compounds** which are known to the State of California to cause cancer and birth defects or other reproductive harm. For more information go to www.P65Warnings.ca.gov

Parker Hannifin Corporation
Cylinder Division
Des Plaines, Illinois USA

Double Rod Cylinder

Style K

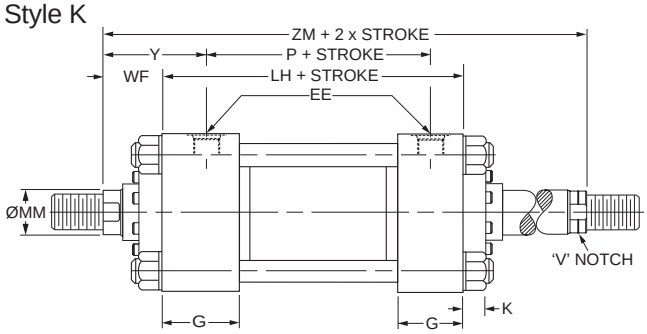

Rod End #1 **Rod End #2**

Double Rod End Mounting Styles

See Mounting Groups page in Section H for guidance on double rod end cylinder mounting style selection.

Mounting Styles for Single Rod Models	Mounting Styles for Corresponding Double Rod Models[1]		Dimensions Shown on This Page Supplement Dimensions on 1.50"-6.00" Bore Pages Listed Below
	Load Connected To Rod On Cylinder Mounting End	Load Connected To Rod Opposite Cylinder Mounting End	
T	KT	KT	54
TB	KTB	KTC	54
TD	KTD	KTD	54
J	KJ	KH	55
JB	KJB	KHB	56
JJ	KJJ	KHH	57
C	KC	KC	61
F	KF	KF	62
D	KD	KDB	64
DD	KDD[2]	KDD[2]	66
DE	KDE[2]	KDE[2]	67

[1] Connect load to piston rod without 'V' notch. If only one end of the Double Rod Cylinder is to be cushioned, be sure to clearly specify which end this will be.

[2] Specify XI dimension for Styles DD & DE from #1 rod end (without 'V' notch).

How to Use Double Rod Cylinder Dimension Drawings

To determine dimensions for a double rod cylinder, first refer to the desired single rod mounting style cylinder shown on preceding pages of this catalog. (See table above.) After selecting necessary dimensions from that drawing, return to this page supplement the single rod dimensions with those shown on drawing at right and dimension table below. Note that double rod cylinders have a head (Dim. G) at both ends and that dimension LH replaces LG. The double rod dimensions differ from, or are in addition to those for single rod cylinders shown on preceding pages and provide the information needed to completely dimension a double rod cylinder.

On a double rod cylinder where the two rod ends are different, be sure to clearly state which rod end is to be assembled at which end. Port position 1 is standard. If other than standard, specify pos. 2, 3 or 4 when viewed from rod end #1 only. See port position information in Section H.

Bore Ø	Rod No.	MM Rod Ø	Add Stroke			Add 2X Stroke
			LH	SNK	SSK	ZM
1.50	1 (std.)	0.625	4.88	2.88	4.13	6.88
	2	1.000	4.88	2.88	4.13	7.63
2.00	1 (std.)	1.000	4.88	2.88	3.88	7.63
	2	1.375	4.88	2.88	3.88	8.13
2.50	1 (std.)	1.000	5.00	3.00	3.63	7.75
	2	1.750	5.00	3.00	3.63	8.75
	3	1.375	5.00	3.00	3.63	8.25
3.25	1 (std.)	1.375	5.75	3.50	4.38	9.00
	2	2.000	5.75	3.50	4.38	9.75
	3	1.750	5.75	3.50	4.38	9.50
4.00	1 (std.)	1.750	6.00	3.75	4.25	9.75
	2	2.500	6.00	3.75	4.25	10.50
	3	2.000	6.00	3.75	4.25	10.00
5.00	1 (std.)	2.000	6.50	4.25	4.75	10.50
	2	3.500	6.50	4.25	4.75	11.00
	3	2.500	6.50	4.25	4.75	11.00
	4	3.000	6.50	4.25	4.75	11.00
6.00	1 (std.)	2.500	7.38	4.88	5.13	11.88
	2	4.000	7.38	4.88	5.13	11.88
	3	3.000	7.38	4.88	5.13	11.88
	4	3.500	7.38	4.88	5.13	11.88
Replaces On single rod mounting styles:			**LG**	**SN**	**SS**	–
			All Mtg. Styles	**F**	**C**	**All Mtg. Styles**

Series 2HD Rod Gland Retention[3]

B = Bolt -On Gland with Circular Retainer
R = Tie Rod Retained Gland

Bore Ø	Rod No.	MM Rod Ø	Mounting Style			
			TC, H, HB, HH, C, F, D, DB, DD, DE, BB, SB, SE	TB, TD	J, JB	JJ
1.50	1 (Std.)	0.625	B	R	R	B
	2	1.000	R	R	R	B
2.00	1 (Std.)	1.000	B	R	R	B
	2	1.375	R	R	R	B
2.50	1 (Std.)	1.000	B	B	B	B
	2	1.750	B	B	R	B
	3	1.375	B	B	B	B
3.25	All	All	B	B	B	B
4.00	All	All	B	B	B	B
5.00	1 (Std.)	2.000	B	B	B	B
	2	3.500	B	B	R	B
	3	2.500	B	B	B	B
	4	3.000	B	B	B	B
6.00	All	All	B	B	B	B

[3] Gland retention style may vary when thrust key retainer or gland drain option is included. Contact factory for details.

⚠PROP 65 WARNING **WARNING:** This product can expose you to chemicals including **Lead and Lead Compounds** which are known to the State of California to cause cancer and birth defects or other reproductive harm. For more information go to www.P65Warnings.ca.gov

Rod End Dimensions

Thread Style 4 (NFPA Style SM)
Small Male

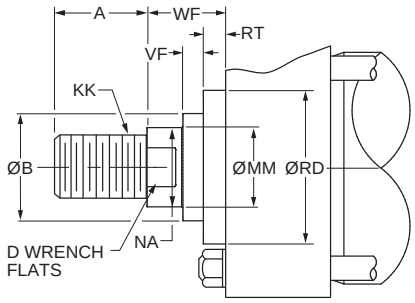

Thread Style 8 (NFPA Style IM)
Intermediate Male

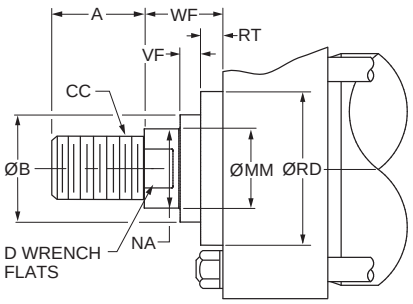

Thread Style 9[2] (NFPA Style SF)
Small Female

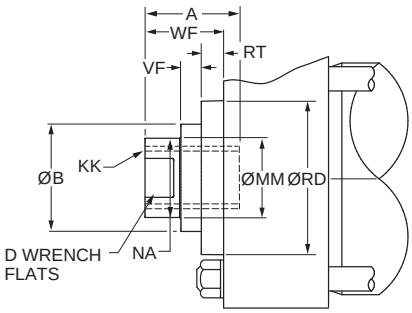

Thread Style 55[1]

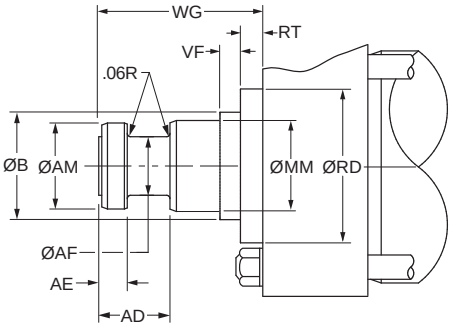

Rod End Dimensions

Bore Ø	Rod No.	MM Rod Ø	Thread		Rod Extensions and Pilot Dimensions							
			Style 8 CC	Style 4 & 9 KK	A	B Ø +.000 -.002	D	NA	VF	RD Ø	RT	WF
7.00	1 (std.)	3.000	2 3/4-12	2 1/4-12	3.50	3.749	2.63	2.88	0.40	5.26	0.85	2.25
	2	5.000	4 3/4-12	3 1/2-12	5.00	5.749	-[3]	4.88	0.34	7.25	0.91	2.25
	3	3.500	3 1/4-12	2 1/2-12	3.50	4.249	3.00	3.38	0.34	5.76	0.91	2.25
	4	4.000	3 3/4-12	3-12	4.00	4.749	3.38	3.88	0.34	6.31	0.91	2.25
	5	4.500	4 1/4-12	3 1/4-12	4.50	5.249	-[3]	4.38	0.34	6.94	0.91	2.25
8.00	1 (std.)	3.500	3 1/4-12	2 1/2-12	3.50	4.249	3.00	3.38	0.34	5.76	0.91	2.25
	2	5.500	5 1/4-12	4-12	5.50	6.249	-[3]	5.38	0.34	7.94	0.91	2.25
	3	4.000	3 3/4-12	3-12	4.00	4.749	3.38	3.88	0.34	6.31	0.91	2.25
	4	4.500	4 1/4-12	3 1/4-12	4.50	5.249	-[3]	4.38	0.34	6.94	0.91	2.25
	5	5.000	4 3/4-12	3 1/2-12	5.00	5.749	-[3]	4.88	0.34	7.25	0.91	2.25

"Special" Thread Style 3

Special thread, extension, rod eye, blank, etc., are also available.

To order, specify "Style 3" and give desired dimensions for KK, A, W or WF. If otherwise special, furnish dimensioned sketch.

[1] For special WG dimension, specify "Style 3" and give desired dimension for WG. For other changes, place "S" in the model code, and describe rod end with dimensioned sketch.

[2] Style 9 stroke restrictions may apply. See Style 9 Minimum Stroke Table on How to Order page for details.

[3] These piston rod numbers will have 4 spanner wrench holes instead of wrench flats. See rod drawings on 3H Large Bore Piston Rod Ends page for dimensions.

Style 55 Rod End

MM Rod Ø	AD	AE +.001 -.001	AF Ø	AM Ø	WG[1]
3.000	2.44	0.874	2.25	2.95	4.88
3.500	2.69	0.999	2.50	3.45	5.63
4.000	2.69	0.999	3.00	3.95	5.75
4.500	3.19	1.499	3.50	4.45	6.50
5.000	3.19	1.499	3.88	4.95	6.63
5.500	3.94	1.874	4.38	5.45	7.50

⚠**PROP 65 WARNING** **WARNING:** This product can expose you to chemicals including **Lead and Lead Compounds** which are known to the State of California to cause cancer and birth defects or other reproductive harm. For more information go to www.P65Warnings.ca.gov

Tie Rods Extended Both Ends
Style TD
(NFPA Style MX1)

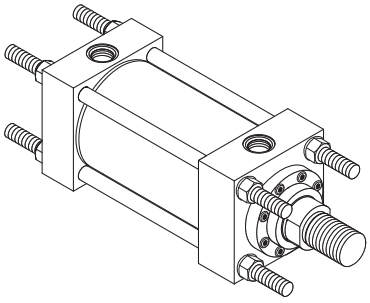

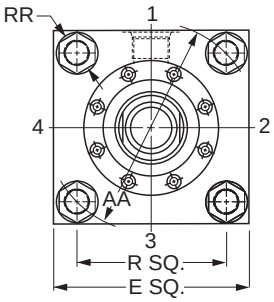

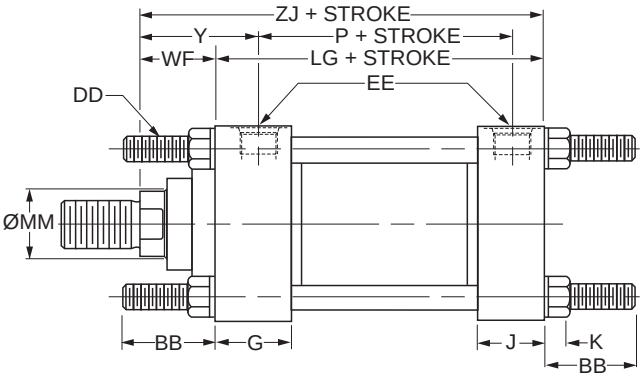

Basic Mounting (T) — NFPA MXO — Not shown is no tie rod extended and can be supplied upon request.

Style TD – Dimensional and Mounting Data

Bore Ø	Rod No.	MM Rod Ø	AA	BB	DD	E	EE		G	J	K Max.	R	RR	WF	Y	Add Stroke		
							NPTF[1]	SAE[2]								LG	P	ZJ
7.00	1 (std.)	3.000	9.31	4.13	1 1/8-12	8.50	1 1/4	20	2.75	2.75	1.16	6.58	1.90	2.25	3.69	8.50	5.63	10.75
	2	5.000	9.31	4.13	1 1/8-12	8.50	1 1/4	20	2.75	2.75	1.16	6.58	1.90	2.25	3.69	8.50	5.63	10.75
	3	3.500	9.31	4.13	1 1/8-12	8.50	1 1/4	20	2.75	2.75	1.16	6.58	1.90	2.25	3.69	8.50	5.63	10.75
	4	4.000	9.31	4.13	1 1/8-12	8.50	1 1/4	20	2.75	2.75	1.16	6.58	1.90	2.25	3.69	8.50	5.63	10.75
	5	4.500	9.31	4.13	1 1/8-12	8.50	1 1/4	20	2.75	2.75	1.16	6.58	1.90	2.25	3.69	8.50	5.63	10.75
8.00	1 (std.)	3.500	10.61	4.50	1 1/4-12	9.50	1 1/2	24	3.00	3.00	1.28	7.50	2.19	2.25	3.81	9.50	6.38	11.75
	2	5.500	10.61	4.50	1 1/4-12	9.50	1 1/2	24	3.00	3.00	1.28	7.50	2.19	2.25	3.81	9.50	6.38	11.75
	3	4.000	10.61	4.50	1 1/4-12	9.50	1 1/2	24	3.00	3.00	1.28	7.50	2.19	2.25	3.81	9.50	6.38	11.75
	4	4.500	10.61	4.50	1 1/4-12	9.50	1 1/2	24	3.00	3.00	1.28	7.50	2.19	2.25	3.81	9.50	6.38	11.75
	5	5.000	10.61	4.50	1 1/4-12	9.50	1 1/2	24	3.00	3.00	1.28	7.50	2.19	2.25	3.81	9.50	6.38	11.75

[1]NPTF ports are available at no extra charge.
[2]SAE straight thread ports are standard and are indicated by port number.

Style TB

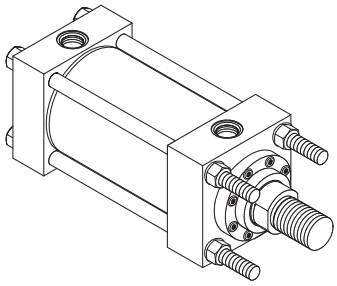

Style TC

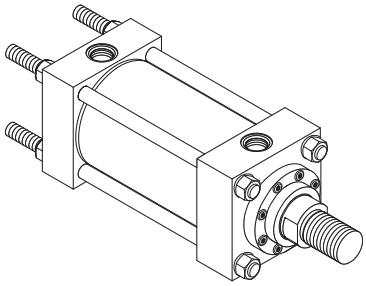

Dimensions for TB and TC Mount may be obtained from the above dimensional table.

⚠**PROP 65 WARNING** **WARNING:** This product can expose you to chemicals including **Lead and Lead Compounds** which are known to the State of California to cause cancer and birth defects or other reproductive harm. For more information go to www.P65Warnings.ca.gov

Head Rectangular Flange Mounting
Style J
(NFPA Style MF1)

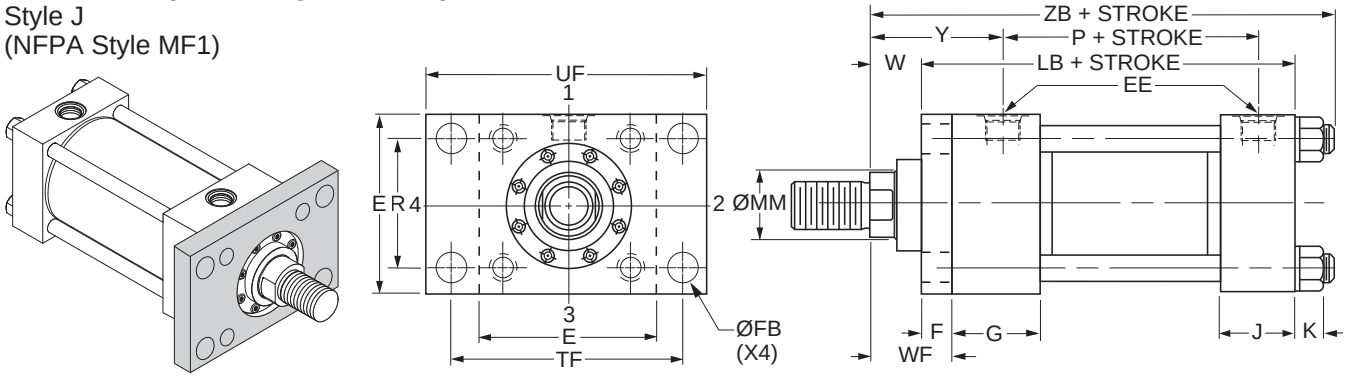

Style J – Dimensional and Mounting Data

For pressures exceeding those shown use mounting styles JB or JJ.

Bore Ø	Rod No.	MM Rod Ø	E	EE		F	FB Ø	G	J	K Max.	R	TF	UF	W	WF	Y	Add Stroke		
				NPTF[1]	SAE[2]												LB	P	ZB Max.
7.00	1 (std.)	3.000	8.50	1 1/4	20	1.00	1.19	2.75	2.75	1.16	6.58	10.63	12.63	1.25	2.25	3.69	9.50	5.63	12.16
	2	5.000	8.50	1 1/4	20	1.00	1.19	2.75	2.75	1.16	6.58	10.63	12.63	1.25	2.25	3.69	9.50	5.63	12.16
	3	3.500	8.50	1 1/4	20	1.00	1.19	2.75	2.75	1.16	6.58	10.63	12.63	1.25	2.25	3.69	9.50	5.63	12.16
	4	4.000	8.50	1 1/4	20	1.00	1.19	2.75	2.75	1.16	6.58	10.63	12.63	1.25	2.25	3.69	9.50	5.63	12.16
	5	4.500	8.50	1 1/4	20	1.00	1.19	2.75	2.75	1.16	6.58	10.63	12.63	1.25	2.25	3.69	9.50	5.63	12.16
8.00	1 (std.)	3.500	9.50	1 1/2	24	1.00	1.31	3.00	3.00	1.28	7.50	11.81	14.00	1.25	2.25	3.81	10.50	6.38	13.28
	2	5.500	9.50	1 1/2	24	1.00	1.31	3.00	3.00	1.28	7.50	11.81	14.00	1.25	2.25	3.81	10.50	6.38	13.28
	3	4.000	9.50	1 1/2	24	1.00	1.31	3.00	3.00	1.28	7.50	11.81	14.00	1.25	2.25	3.81	10.50	6.38	13.28
	4	4.500	9.50	1 1/2	24	1.00	1.31	3.00	3.00	1.28	7.50	11.81	14.00	1.25	2.25	3.81	10.50	6.38	13.28
	5	5.000	9.50	1 1/2	24	1.00	1.31	3.00	3.00	1.28	7.50	11.81	14.00	1.25	2.25	3.81	10.50	6.38	13.28

[1]NPTF ports are available at no extra charge.
[2]SAE straight thread ports are standard and are indicated by port number.

Style J – Maximum Operating Pressure / 3HD

Bore Ø	Max. psi Push[3]				
	Rod Code				
	1	2	3	4	5
7.00	1000	400	800	400	400
8.00	800	400	700	400	400

[3]Maximum pressure rating – push application.

⚠**PROP 65 WARNING** **WARNING:** This product can expose you to chemicals including **Lead and Lead Compounds** which are known to the State of California to cause cancer and birth defects or other reproductive harm. For more information go to www.P65Warnings.ca.gov

Head Square Flange Mounting
Style JB
(NFPA Style MF5)

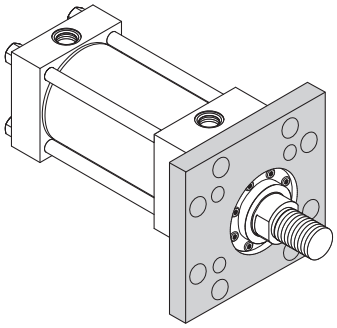

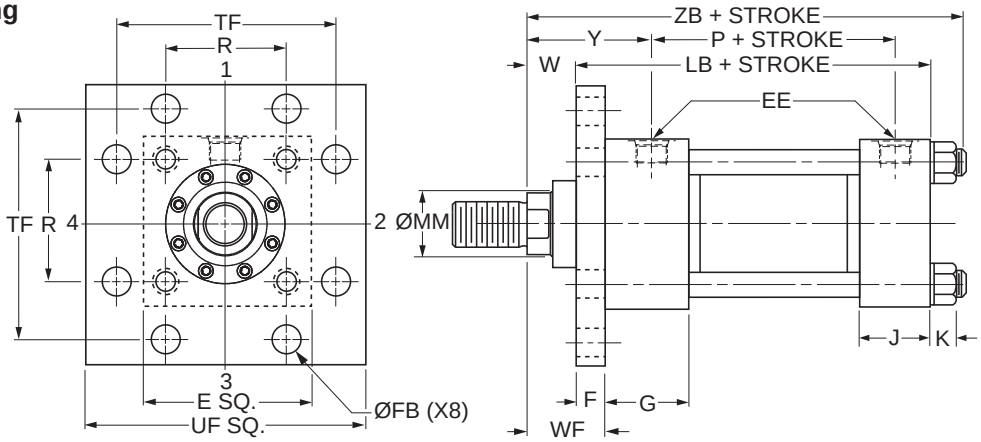

Style JB – Dimensional and Mounting Data

Bore Ø	Rod No.	MM Rod Ø	E	EE		F	FB Ø	G	J	K Max.	R	TF	UF	W	WF	Y	Add Stroke		
				NPTF[1]	SAE[2]												LB	P	ZB Max.
7.00	1 (std.)	3.000	8.50	1 1/4	20	1.00	1.19	2.75	2.75	1.16	6.58	10.63	12.63	1.25	2.25	3.69	9.50	5.63	12.16
	2	5.000	8.50	1 1/4	20	1.00	1.19	2.75	2.75	1.16	6.58	10.63	12.63	1.25	2.25	3.69	9.50	5.63	12.16
	3	3.500	8.50	1 1/4	20	1.00	1.19	2.75	2.75	1.16	6.58	10.63	12.63	1.25	2.25	3.69	9.50	5.63	12.16
	4	4.000	8.50	1 1/4	20	1.00	1.19	2.75	2.75	1.16	6.58	10.63	12.63	1.25	2.25	3.69	9.50	5.63	12.16
	5	4.500	8.50	1 1/4	20	1.00	1.19	2.75	2.75	1.16	6.58	10.63	12.63	1.25	2.25	3.69	9.50	5.63	12.16
8.00	1 (std.)	3.500	9.50	1 1/2	24	1.00	1.31	3.00	3.00	1.28	7.50	11.81	14.00	1.25	2.25	3.81	10.50	6.38	13.28
	2	5.500	9.50	1 1/2	24	1.00	1.31	3.00	3.00	1.28	7.50	11.81	14.00	1.25	2.25	3.81	10.50	6.38	13.28
	3	4.000	9.50	1 1/2	24	1.00	1.31	3.00	3.00	1.28	7.50	11.81	14.00	1.25	2.25	3.81	10.50	6.38	13.28
	4	4.500	9.50	1 1/2	24	1.00	1.31	3.00	3.00	1.28	7.50	11.81	14.00	1.25	2.25	3.81	10.50	6.38	13.28
	5	5.000	9.50	1 1/2	24	1.00	1.31	3.00	3.00	1.28	7.50	11.81	14.00	1.25	2.25	3.81	10.50	6.38	13.28

[1]NPTF ports are available at no extra charge.
[2]SAE straight thread ports are standard and are indicated by port number.

Style JB – Maximum Operating Pressure / 3HD

Bore Ø	Max. psi Push[3]				
	Rod Code				
	1	2	3	4	5
7.00	2500	1500	2200	1500	1500
8.00	2000	1400	2000	1400	1400

[3]Maximum pressure rating – push application.

⚠**PROP 65 WARNING** **WARNING:** This product can expose you to chemicals including **Lead and Lead Compounds** which are known to the State of California to cause cancer and birth defects or other reproductive harm. For more information go to www.P65Warnings.ca.gov

Head Rectangular Mounting
Style JJ
(NFPA Style ME5)

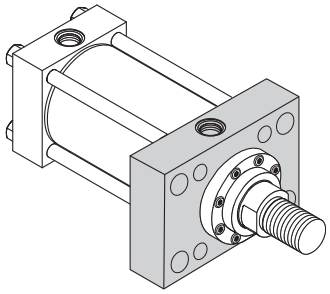

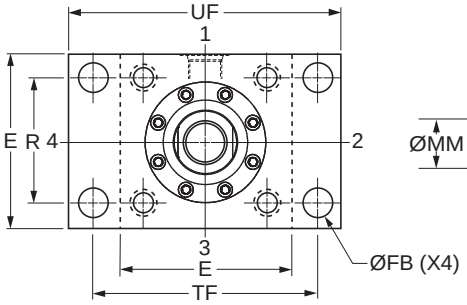

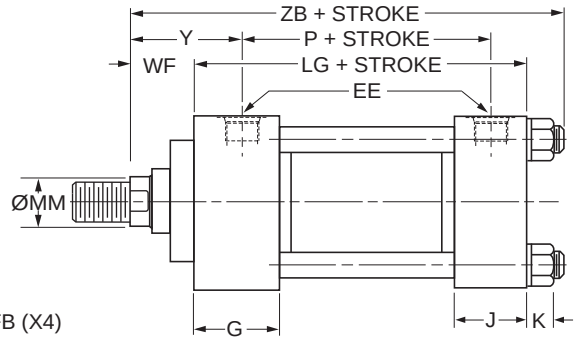

Style JJ – Dimensional and Mounting Data

Bore Ø	Rod No.	MM Rod Ø	E	EE		FB Ø	G	J	K Max.	R	TF	UF	WF	Y	Add Stroke		
				NPTF[1]	SAE[2]										LG	P	ZB Max.
7.00	1 (std.)	3.000	8.50	1 1/4	20	1.19	2.75	2.75	1.16	6.58	10.63	12.63	2.25	3.69	8.50	5.63	12.16
	2	5.000	8.50	1 1/4	20	1.19	2.75	2.75	1.16	6.58	10.63	12.63	2.25	3.69	8.50	5.63	12.16
	3	3.500	8.50	1 1/4	20	1.19	2.75	2.75	1.16	6.58	10.63	12.63	2.25	3.69	8.50	5.63	12.16
	4	4.000	8.50	1 1/4	20	1.19	2.75	2.75	1.16	6.58	10.63	12.63	2.25	3.69	8.50	5.63	12.16
	5	4.500	8.50	1 1/4	20	1.19	2.75	2.75	1.16	6.58	10.63	12.63	2.25	3.69	8.50	5.63	12.16
8.00	1 (std.)	3.500	9.50	1 1/2	24	1.31	3.00	3.00	1.28	7.50	11.81	14.00	2.25	3.81	9.50	6.38	13.28
	2	5.500	9.50	1 1/2	24	1.31	3.00	3.00	1.28	7.50	11.81	14.00	2.25	3.81	9.50	6.38	13.28
	3	4.000	9.50	1 1/2	24	1.31	3.00	3.00	1.28	7.50	11.81	14.00	2.25	3.81	9.50	6.38	13.28
	4	4.500	9.50	1 1/2	24	1.31	3.00	3.00	1.28	7.50	11.81	14.00	2.25	3.81	9.50	6.38	13.28
	5	5.000	9.50	1 1/2	24	1.31	3.00	3.00	1.28	7.50	11.81	14.00	2.25	3.81	9.50	6.38	13.28

[1]NPTF ports are available at no extra charge.
[2]SAE straight thread ports are standard and are indicated by port number.

⚠**PROP 65 WARNING** **WARNING:** This product can expose you to chemicals including **Lead and Lead Compounds** which are known to the State of California to cause cancer and birth defects or other reproductive harm. For more information go to www.P65Warnings.ca.gov

Cap Rectangular Flange Mounting
Style H
(NFPA Style MF2)

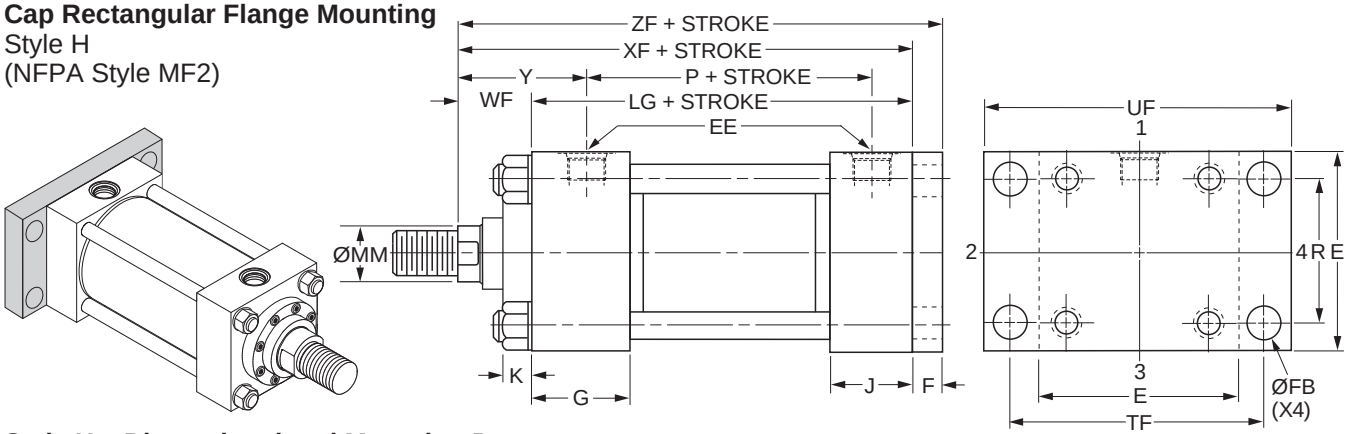

Style H – Dimensional and Mounting Data

Bore Ø	Rod No.	MM Rod Ø	E	EE		F	FB Ø	G	J	K Max.	R	TF	UF	WF	Y	Add Stroke			
				NPTF[1]	SAE[2]											LG	P	XF	ZF
7.00	1 (std.)	3.000	8.50	1 1/4	20	1.00	1.19	2.75	2.75	1.16	6.58	10.63	12.63	2.25	3.69	8.50	5.63	10.75	11.75
	2	5.000	8.50	1 1/4	20	1.00	1.19	2.75	2.75	1.16	6.58	10.63	12.63	2.25	3.69	8.50	5.63	10.75	11.75
	3	3.500	8.50	1 1/4	20	1.00	1.19	2.75	2.75	1.16	6.58	10.63	12.63	2.25	3.69	8.50	5.63	10.75	11.75
	4	4.000	8.50	1 1/4	20	1.00	1.19	2.75	2.75	1.16	6.58	10.63	12.63	2.25	3.69	8.50	5.63	10.75	11.75
	5	4.500	8.50	1 1/4	20	1.00	1.19	2.75	2.75	1.16	6.58	10.63	12.63	2.25	3.69	8.50	5.63	10.75	11.75
8.00	1 (std.)	3.500	9.50	1 1/2	24	1.00	1.31	3.00	3.00	1.28	7.50	11.81	14.00	2.25	3.81	9.50	6.38	11.75	12.75
	2	5.500	9.50	1 1/2	24	1.00	1.31	3.00	3.00	1.28	7.50	11.81	14.00	2.25	3.81	9.50	6.38	11.75	12.75
	3	4.000	9.50	1 1/2	24	1.00	1.31	3.00	3.00	1.28	7.50	11.81	14.00	2.25	3.81	9.50	6.38	11.75	12.75
	4	4.500	9.50	1 1/2	24	1.00	1.31	3.00	3.00	1.28	7.50	11.81	14.00	2.25	3.81	9.50	6.38	11.75	12.75
	5	5.000	9.50	1 1/2	24	1.00	1.31	3.00	3.00	1.28	7.50	11.81	14.00	2.25	3.81	9.50	6.38	11.75	12.75

[1]NPTF ports are available at no extra charge.
[2]SAE straight thread ports are standard and are indicated by port number.

Style H – Maximum Operating Pressure / 3HD

Bore Ø	Max. psi Pull[3]				
	Rod Code				
	1	2	3	4	5
7.00	2000	3000	2000	2500	2800
8.00	1700	2500	1700	1800	2200

[3]Maximum pressure rating – pull application.

⚠**PROP 65 WARNING** **WARNING:** This product can expose you to chemicals including **Lead and Lead Compounds** which are known to the State of California to cause cancer and birth defects or other reproductive harm. For more information go to www.P65Warnings.ca.gov

Cap Square Flange Mounting
Style HB
(NFPA Style MF6)

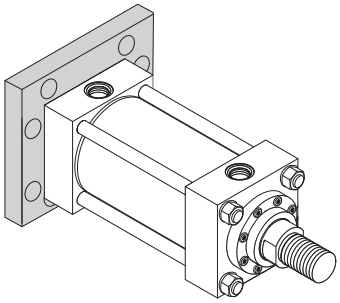

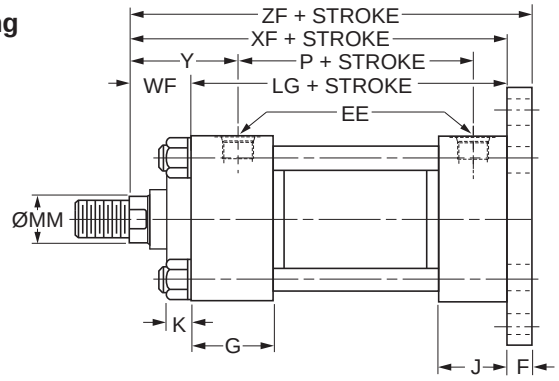

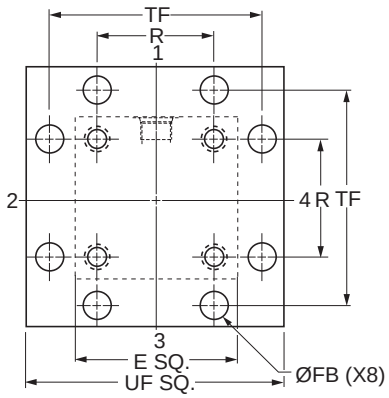

Style HB – Dimensional and Mounting Data

Bore Ø	Rod No.	MM Rod Ø	E	EE		F	FB Ø	G	J	K Max.	R	TF	UF	WF	Y	Add Stroke			
				NPTF[1]	SAE[2]											LG	P	XF	ZF
7.00	1 (std.)	3.000	8.50	1 1/4	20	1.00	1.19	2.75	2.75	1.16	6.58	10.63	12.63	2.25	3.69	8.50	5.63	10.75	11.75
	2	5.000	8.50	1 1/4	20	1.00	1.19	2.75	2.75	1.16	6.58	10.63	12.63	2.25	3.69	8.50	5.63	10.75	11.75
	3	3.500	8.50	1 1/4	20	1.00	1.19	2.75	2.75	1.16	6.58	10.63	12.63	2.25	3.69	8.50	5.63	10.75	11.75
	4	4.000	8.50	1 1/4	20	1.00	1.19	2.75	2.75	1.16	6.58	10.63	12.63	2.25	3.69	8.50	5.63	10.75	11.75
	5	4.500	8.50	1 1/4	20	1.00	1.19	2.75	2.75	1.16	6.58	10.63	12.63	2.25	3.69	8.50	5.63	10.75	11.75
8.00	1 (std.)	3.500	9.50	1 1/2	24	1.00	1.31	3.00	3.00	1.28	7.50	11.81	14.00	2.25	3.81	9.50	6.38	11.75	12.75
	2	5.500	9.50	1 1/2	24	1.00	1.31	3.00	3.00	1.28	7.50	11.81	14.00	2.25	3.81	9.50	6.38	11.75	12.75
	3	4.000	9.50	1 1/2	24	1.00	1.31	3.00	3.00	1.28	7.50	11.81	14.00	2.25	3.81	9.50	6.38	11.75	12.75
	4	4.500	9.50	1 1/2	24	1.00	1.31	3.00	3.00	1.28	7.50	11.81	14.00	2.25	3.81	9.50	6.38	11.75	12.75
	5	5.000	9.50	1 1/2	24	1.00	1.31	3.00	3.00	1.28	7.50	11.81	14.00	2.25	3.81	9.50	6.38	11.75	12.75

[1]NPTF ports are available at no extra charge. [2]SAE straight thread ports are standard and are indicated by port number.

Cap Rectangular Mounting
Style HH
(NFPA Style ME6)

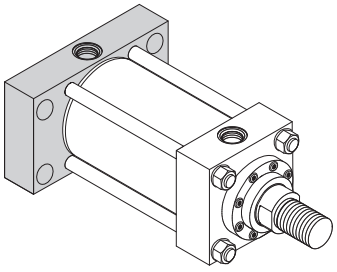

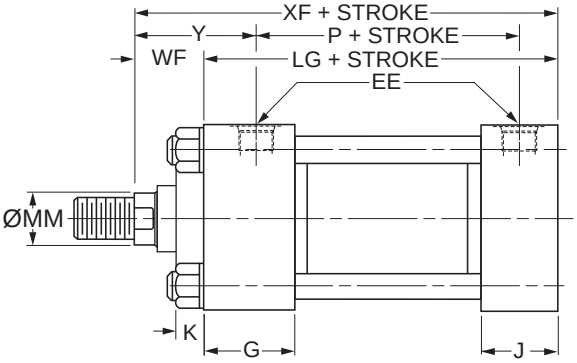

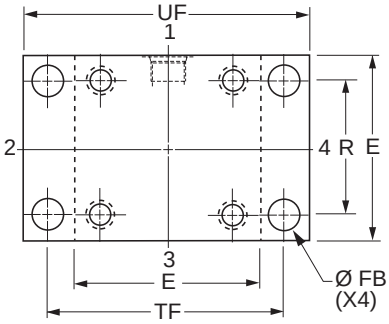

Style HH – Dimensional and Mounting Data

Bore Ø	Rod No	MM Rod Ø	E	EE		FB Ø	G	J	K Max.	R	TF	UF	WF	Y	Add Stroke		
				NPTF[1]	SAE[2]										LG	P	XF
7.00	1 (std.)	3.000	8.50	1 1/4	20	1.19	2.75	2.75	1.16	6.58	10.63	12.63	2.25	3.69	8.50	5.63	10.75
	2	5.000	8.50	1 1/4	20	1.19	2.75	2.75	1.16	6.58	10.63	12.63	2.25	3.69	8.50	5.63	10.75
	3	3.500	8.50	1 1/4	20	1.19	2.75	2.75	1.16	6.58	10.63	12.63	2.25	3.69	8.50	5.63	10.75
	4	4.000	8.50	1 1/4	20	1.19	2.75	2.75	1.16	6.58	10.63	12.63	2.25	3.69	8.50	5.63	10.75
	5	4.500	8.50	1 1/4	20	1.19	2.75	2.75	1.16	6.58	10.63	12.63	2.25	3.69	8.50	5.63	10.75
8.00	1 (std.)	3.500	9.50	1 1/2	24	1.31	3.00	3.00	1.28	7.50	11.81	14.00	2.25	3.81	9.50	6.38	11.75
	2	5.500	9.50	1 1/2	24	1.31	3.00	3.00	1.28	7.50	11.81	14.00	2.25	3.81	9.50	6.38	11.75
	3	4.000	9.50	1 1/2	24	1.31	3.00	3.00	1.28	7.50	11.81	14.00	2.25	3.81	9.50	6.38	11.75
	4	4.500	9.50	1 1/2	24	1.31	3.00	3.00	1.28	7.50	11.81	14.00	2.25	3.81	9.50	6.38	11.75
	5	5.000	9.50	1 1/2	24	1.31	3.00	3.00	1.28	7.50	11.81	14.00	2.25	3.81	9.50	6.38	11.75

[1]NPTF ports are available at no extra charge. [2]SAE straight thread ports are standard and are indicated by port number.

⚠**PROP 65 WARNING** **WARNING:** This product can expose you to chemicals including **Lead and Lead Compounds** which are known to the State of California to cause cancer and birth defects or other reproductive harm. For more information go to www.P65Warnings.ca.gov

Side Lug Mounting
Style C
(NFPA Style MS2)

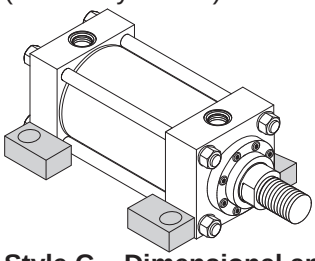

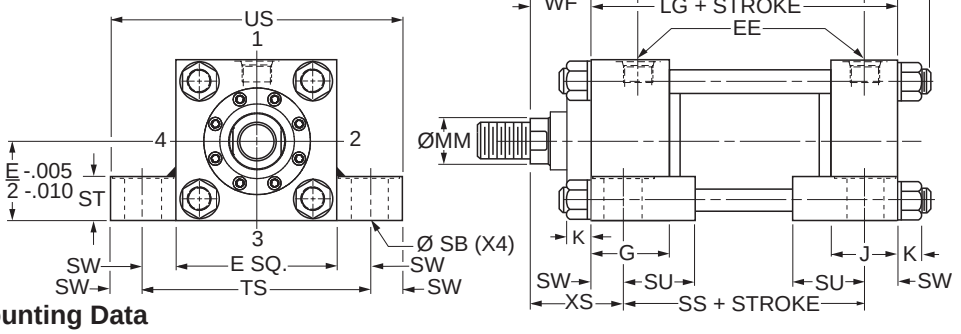

Style C – Dimensional and Mounting Data

Bore Ø	Rod No.	MM Rod Ø	E	EE		G	J	K Max.	SB Ø	ST	SU	SW	TS	US	WF	XS	Y	Add Stroke			
				NPTF[1]	SAE[2]													LG	P	SS	ZB Max.
7.00	1 (std.)	3.000	8.50	1 1/4	20	2.75	2.75	1.16	1.56	1.75	2.88	1.38	11.25	14.00	2.25	3.63	3.69	8.50	5.63	5.75	12.16
	2	5.000	8.50	1 1/4	20	2.75	2.75	1.16	1.56	1.75	2.88	1.38	11.25	14.00	2.25	3.63	3.69	8.50	5.63	5.75	12.16
	3	3.500	8.50	1 1/4	20	2.75	2.75	1.16	1.56	1.75	2.88	1.38	11.25	14.00	2.25	3.63	3.69	8.50	5.63	5.75	12.16
	4	4.000	8.50	1 1/4	20	2.75	2.75	1.16	1.56	1.75	2.88	1.38	11.25	14.00	2.25	3.63	3.69	8.50	5.63	5.75	12.16
	5	4.500	8.50	1 1/4	20	2.75	2.75	1.16	1.56	1.75	2.88	1.38	11.25	14.00	2.25	3.63	3.69	8.50	5.63	5.75	12.16
8.00	1 (std.)	3.500	9.50	1 1/2	24	3.00	3.00	1.28	1.56	1.75	2.88	1.38	12.25	15.00	2.25	3.63	3.81	9.50	6.38	6.75	13.28
	2	5.500	9.50	1 1/2	24	3.00	3.00	1.28	1.56	1.75	2.88	1.38	12.25	15.00	2.25	3.63	3.81	9.50	6.38	6.75	13.28
	3	4.000	9.50	1 1/2	24	3.00	3.00	1.28	1.56	1.75	2.88	1.38	12.25	15.00	2.25	3.63	3.81	9.50	6.38	6.75	13.28
	4	4.500	9.50	1 1/2	24	3.00	3.00	1.28	1.56	1.75	2.88	1.38	12.25	15.00	2.25	3.63	3.81	9.50	6.38	6.75	13.28
	5	5.000	9.50	1 1/2	24	3.00	3.00	1.28	1.56	1.75	2.88	1.38	12.25	15.00	2.25	3.63	3.81	9.50	6.38	6.75	13.28

[1]NPTF ports are available at no extra charge. [2]SAE straight thread ports are standard and are indicated by port number.

Side Tapped Mounting
Style F
(NFPA Style MS4)

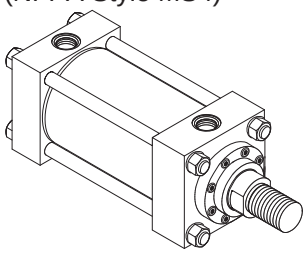

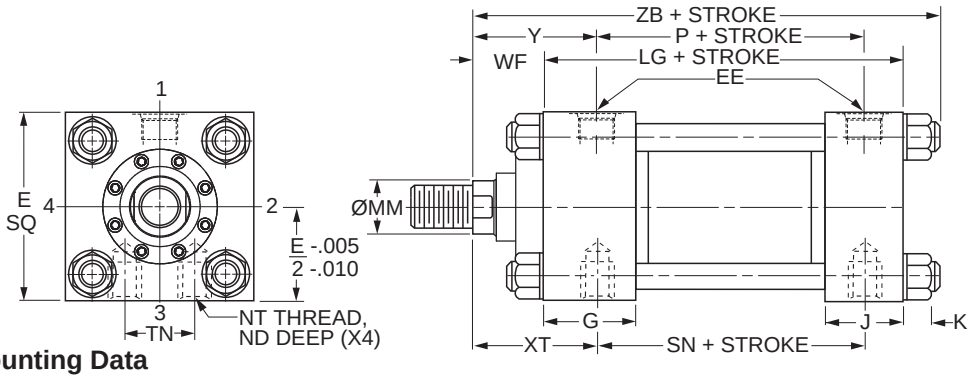

Style F – Dimensional and Mounting Data

Bore Ø	Rod No.	MM Rod Ø	E	EE		G	J	K Max.	ND	NT	TN	WF	XT	Y	Add Stroke			
				NPTF[1]	SAE[2]										LG	P	SN	ZB Max.
7.00	1 (std.)	3.000	8.50	1 1/4	20	2.75	2.75	1.16	1.13	1 1/2-6	3.75	2.25	3.81	3.69	8.50	5.63	5.88	12.16
	2	5.000	8.50	1 1/4	20	2.75	2.75	1.16	1.13	1 1/2-6	3.75	2.25	3.81	3.69	8.50	5.63	5.88	12.16
	3	3.500	8.50	1 1/4	20	2.75	2.75	1.16	1.13	1 1/2-6	3.75	2.25	3.81	3.69	8.50	5.63	5.88	12.16
	4	4.000	8.50	1 1/4	20	2.75	2.75	1.16	1.13	1 1/2-6	3.75	2.25	3.81	3.69	8.50	5.63	5.88	12.16
	5	4.500	8.50	1 1/4	20	2.75	2.75	1.16	1.13	1 1/2-6	3.75	2.25	3.81	3.69	8.50	5.63	5.88	12.16
8.00	1 (std.)	3.500	9.50	1 1/2	24	3.00	3.00	1.28	1.50	1 1/2-6	4.25	2.25	3.94	3.81	9.50	6.38	6.63	13.28
	2	5.500	9.50	1 1/2	24	3.00	3.00	1.28	1.50	1 1/2-6	4.25	2.25	3.94	3.81	9.50	6.38	6.63	13.28
	3	4.000	9.50	1 1/2	24	3.00	3.00	1.28	1.50	1 1/2-6	4.25	2.25	3.94	3.81	9.50	6.38	6.63	13.28
	4	4.500	9.50	1 1/2	24	3.00	3.00	1.28	1.50	1 1/2-6	4.25	2.25	3.94	3.81	9.50	6.38	6.63	13.28
	5	5.000	9.50	1 1/2	24	3.00	3.00	1.28	1.50	1 1/2-6	4.25	2.25	3.94	3.81	9.50	6.38	6.63	13.28

[1]NPTF ports are available at no extra charge. [2]SAE straight thread ports are standard and are indicated by port number.

⚠PROP 65 WARNING **WARNING:** This product can expose you to chemicals including **Lead and Lead Compounds** which are known to the State of California to cause cancer and birth defects or other reproductive harm. For more information go to www.P65Warnings.ca.gov

Cap Fixed Clevis Mounting
Style BB
(NFPA Style MP1)

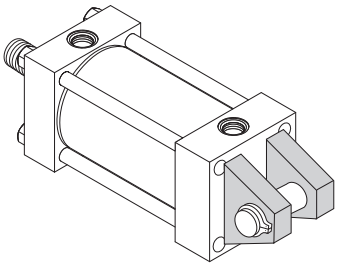

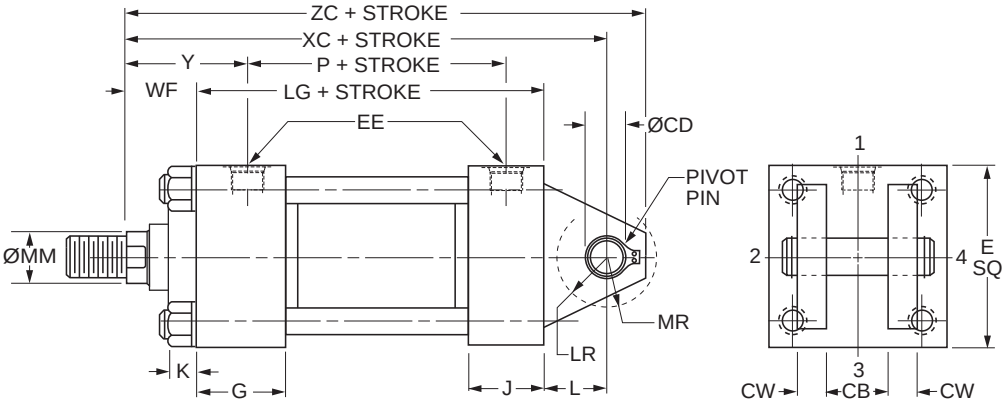

Style BB – Dimensional and Mounting Data

Bore Ø	Rod No.	MM Rod Ø	CB	CD[3] Ø +.000 -.002	CW	E	EE		G	J	K Max.	L	LR	MR
							NPTF[1]	SAE[2]						
7.00	1 (std.)	3.000	3.00	2.501	1.50	8.50	1 1/4	20	2.75	2.75	1.16	3.00	2.75	2.88
	2	5.000	3.00	2.501	1.50	8.50	1 1/4	20	2.75	2.75	1.16	3.00	2.75	2.88
	3	3.500	3.00	2.501	1.50	8.50	1 1/4	20	2.75	2.75	1.16	3.00	2.75	2.88
	4	4.000	3.00	2.501	1.50	8.50	1 1/4	20	2.75	2.75	1.16	3.00	2.75	2.88
	5	4.500	3.00	2.501	1.50	8.50	1 1/4	20	2.75	2.75	1.16	3.00	2.75	2.88
8.00	1 (std.)	3.500	3.00	3.001	1.50	9.50	1 1/2	24	3.00	3.00	1.28	3.25	3.25	3.13
	2	5.500	3.00	3.001	1.50	9.50	1 1/2	24	3.00	3.00	1.28	3.25	3.25	3.13
	3	4.000	3.00	3.001	1.50	9.50	1 1/2	24	3.00	3.00	1.28	3.25	3.25	3.13
	4	4.500	3.00	3.001	1.50	9.50	1 1/2	24	3.00	3.00	1.28	3.25	3.25	3.13
	5	5.000	3.00	3.001	1.50	9.50	1 1/2	24	3.00	3.00	1.28	3.25	3.25	3.13

[1]NPTF ports are available at no extra charge.
[2]SAE straight thread ports are standard and are indicated by port number.
[3]Diameter CD is pin diameter.

Style BB – Dimensional and Mounting Data

Bore Ø	Rod No.	MM Rod Ø	WF	Y	Add Stroke			
					LG	P	XC	ZC
7.00	1 (std.)	3.000	2.25	3.69	8.50	5.63	13.75	16.25
	2	5.000	2.25	3.69	8.50	5.63	13.75	16.25
	3	3.500	2.25	3.69	8.50	5.63	13.75	16.25
	4	4.000	2.25	3.69	8.50	5.63	13.75	16.25
	5	4.500	2.25	3.69	8.50	5.63	13.75	16.25
8.00	1 (std.)	3.500	2.25	3.81	9.50	6.38	15.00	17.75
	2	5.500	2.25	3.81	9.50	6.38	15.00	17.75
	3	4.000	2.25	3.81	9.50	6.38	15.00	17.75
	4	4.500	2.25	3.81	9.50	6.38	15.00	17.75
	5	5.000	2.25	3.81	9.50	6.38	15.00	17.75

⚠**PROP 65 WARNING** **WARNING:** This product can expose you to chemicals including **Lead and Lead Compounds** which are known to the State of California to cause cancer and birth defects or other reproductive harm. For more information go to www.P65Warnings.ca.gov

Head Trunnion Mounting
Style D
(NFPA Style MT1)

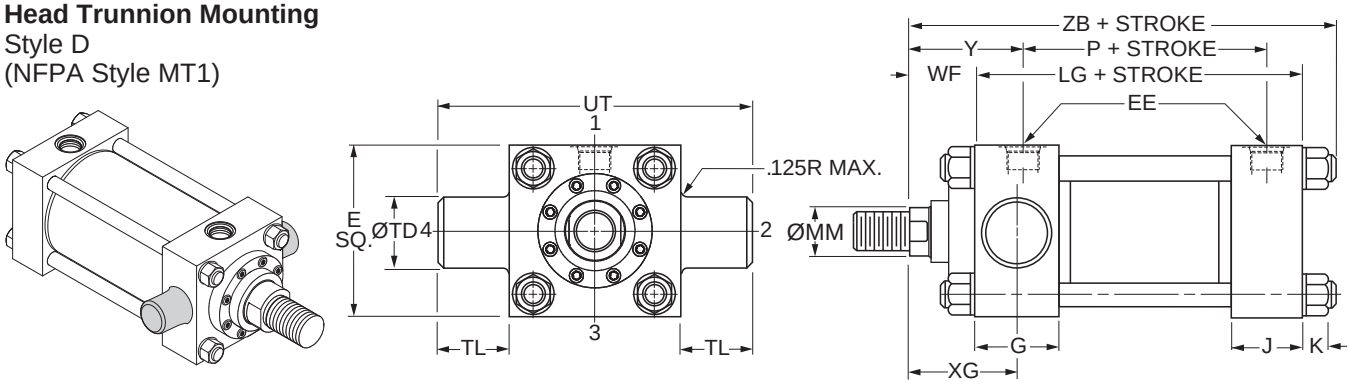

Style D – Dimensional and Mounting Data

Bore Ø	Rod No.	MM Rod Ø	E	EE		G	J	K Max.	TD Ø +.000 -.002	TL	UT	WF	Y	XG
				NPTF[1]	SAE[2]									
7.00	1 (std.)	3.000	8.50	1 1/4	20	2.75	2.75	1.16	2.500	2.50	13.50	2.25	3.69	3.63
	2	5.000	8.50	1 1/4	20	2.75	2.75	1.16	2.500	2.50	13.50	2.25	3.69	3.63
	3	3.500	8.50	1 1/4	20	2.75	2.75	1.16	2.500	2.50	13.50	2.25	3.69	3.63
	4	4.000	8.50	1 1/4	20	2.75	2.75	1.16	2.500	2.50	13.50	2.25	3.69	3.63
	5	4.500	8.50	1 1/4	20	2.75	2.75	1.16	2.500	2.50	13.50	2.25	3.69	3.63
8.00	1 (std.)	3.500	9.50	1 1/2	24	3.00	3.00	1.28	3.000	3.00	15.50	2.25	3.81	3.75
	2	5.500	9.50	1 1/2	24	3.00	3.00	1.28	3.000	3.00	15.50	2.25	3.81	3.75
	3	4.000	9.50	1 1/2	24	3.00	3.00	1.28	3.000	3.00	15.50	2.25	3.81	3.75
	4	4.500	9.50	1 1/2	24	3.00	3.00	1.28	3.000	3.00	15.50	2.25	3.81	3.75
	5	5.000	9.50	1 1/2	24	3.00	3.00	1.28	3.000	3.00	15.50	2.25	3.81	3.75

[1]NPTF ports are available at no extra charge.
[2]SAE straight thread ports are standard and are indicated by port number.

Style D – Dimensional and Mounting Data

Bore Ø	Rod No.	MM Rod Ø	Add Stroke		
			LG	P	ZB Max.
7.00	1 (std.)	3.000	8.50	5.63	12.16
	2	5.000	8.50	5.63	12.16
	3	3.500	8.50	5.63	12.16
	4	4.000	8.50	5.63	12.16
	5	4.500	8.50	5.63	12.16
8.00	1 (std.)	3.500	9.50	6.38	13.28
	2	5.500	9.50	6.38	13.28
	3	4.000	9.50	6.38	13.28
	4	4.500	9.50	6.38	13.28
	5	5.000	9.50	6.38	13.28

⚠**PROP 65 WARNING** **WARNING:** This product can expose you to chemicals including **Lead and Lead Compounds** which are known to the State of California to cause cancer and birth defects or other reproductive harm. For more information go to www.P65Warnings.ca.gov

Cap Trunnion Mounting
Style DB
(NFPA Style MT2)

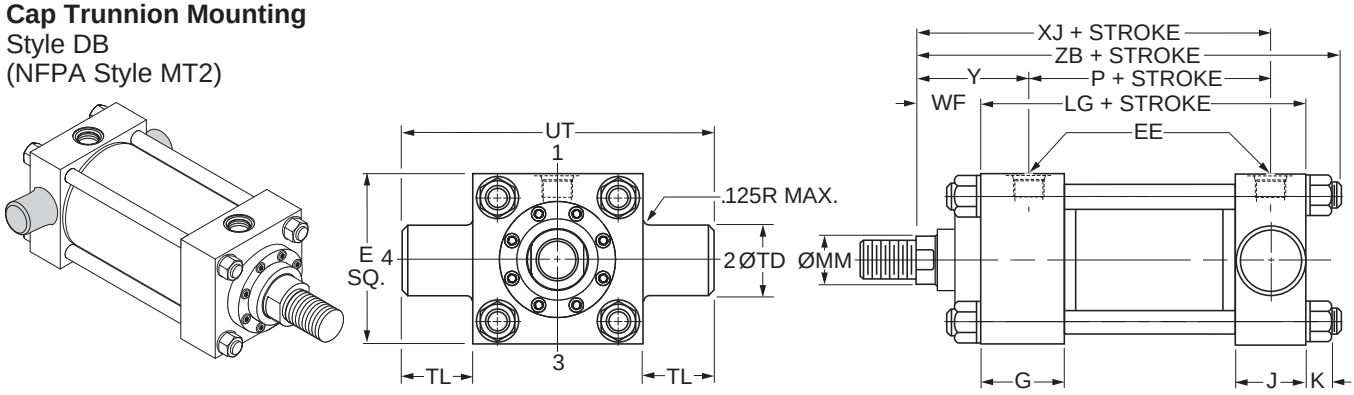

Style DB – Dimensional and Mounting Data

Bore Ø	Rod No.	MM Rod Ø	E	EE		G	J	K Max.	TD Ø +.000 -.002	TL	UT	WF	Y
				NPTF[1]	SAE[2]								
7.00	1 (std.)	3.000	8.50	1 1/4	20	2.75	2.75	1.16	2.500	2.50	13.50	2.25	3.69
	2	5.000	8.50	1 1/4	20	2.75	2.75	1.16	2.500	2.50	13.50	2.25	3.69
	3	3.500	8.50	1 1/4	20	2.75	2.75	1.16	2.500	2.50	13.50	2.25	3.69
	4	4.000	8.50	1 1/4	20	2.75	2.75	1.16	2.500	2.50	13.50	2.25	3.69
	5	4.500	8.50	1 1/4	20	2.75	2.75	1.16	2.500	2.50	13.50	2.25	3.69
8.00	1 (std.)	3.500	9.50	1 1/2	24	3.00	3.00	1.28	3.000	3.00	15.50	2.25	3.81
	2	5.500	9.50	1 1/2	24	3.00	3.00	1.28	3.000	3.00	15.50	2.25	3.81
	3	4.000	9.50	1 1/2	24	3.00	3.00	1.28	3.000	3.00	15.50	2.25	3.81
	4	4.500	9.50	1 1/2	24	3.00	3.00	1.28	3.000	3.00	15.50	2.25	3.81
	5	5.000	9.50	1 1/2	24	3.00	3.00	1.28	3.000	3.00	15.50	2.25	3.81

[1]NPTF ports are available at no extra charge.
[2]SAE straight thread ports are standard and are indicated by port number.

Style DB – Dimensional and Mounting Data

Bore Ø	Rod No.	MM Rod Ø	Add Stroke			
			LG	P	XJ	ZB Max
7.00	1 (std.)	3.000	8.50	5.63	9.38	12.16
	2	5.000	8.50	5.63	9.38	12.16
	3	3.500	8.50	5.63	9.38	12.16
	4	4.000	8.50	5.63	9.38	12.16
	5	4.500	8.50	5.63	9.38	12.16
8.00	1 (std.)	3.500	9.50	6.38	10.25	13.28
	2	5.500	9.50	6.38	10.25	13.28
	3	4.000	9.50	6.38	10.25	13.28
	4	4.500	9.50	6.38	10.25	13.28
	5	5.000	9.50	6.38	10.25	13.28

⚠**PROP 65 WARNING** **WARNING:** This product can expose you to chemicals including **Lead and Lead Compounds** which are known to the State of California to cause cancer and birth defects or other reproductive harm. For more information go to www.P65Warnings.ca.gov

Intermediate Fixed Trunnion Mounting
Style DD
(NFPA Former Standard Style MT4)

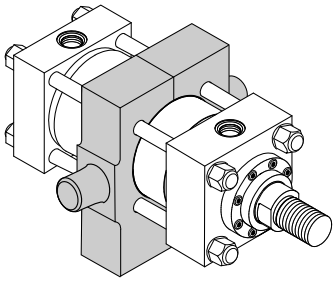

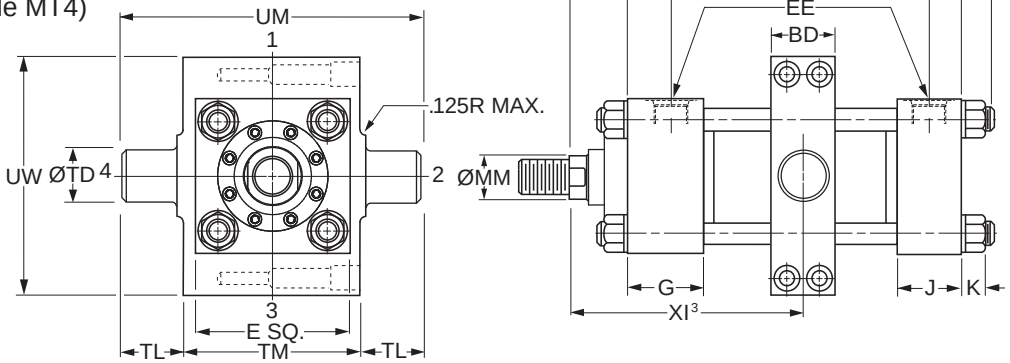

Style DD – Dimensional and Mounting Data

Bore Ø	Rod No.	MM Rod Ø	BD	E	EE		G	J	K Max.	TD Ø +.000 -.002	TL	TM	UM	UW	WF	Y
					NPTF[1]	SAE[2]										
7.00	1 (std.)	3.000	3.00	8.50	1 1/4	20	2.75	2.75	1.16	2.500	2.50	9.75	14.75	11.50	2.25	3.69
	2	5.000	3.00	8.50	1 1/4	20	2.75	2.75	1.16	2.500	2.50	9.75	14.75	11.50	2.25	3.69
	3	3.500	3.00	8.50	1 1/4	20	2.75	2.75	1.16	2.500	2.50	9.75	14.75	11.50	2.25	3.69
	4	4.000	3.00	8.50	1 1/4	20	2.75	2.75	1.16	2.500	2.50	9.75	14.75	11.50	2.25	3.69
	5	4.500	3.00	8.50	1 1/4	20	2.75	2.75	1.16	2.500	2.50	9.75	14.75	11.50	2.25	3.69
8.00	1 (std.)	3.500	3.50	9.50	1 1/2	24	3.00	3.00	1.28	3.000	3.00	11.00	17.00	13.38	2.25	3.81
	2	5.500	3.50	9.50	1 1/2	24	3.00	3.00	1.28	3.000	3.00	11.00	17.00	13.38	2.25	3.81
	3	4.000	3.50	9.50	1 1/2	24	3.00	3.00	1.28	3.000	3.00	11.00	17.00	13.38	2.25	3.81
	4	4.500	3.50	9.50	1 1/2	24	3.00	3.00	1.28	3.000	3.00	11.00	17.00	13.38	2.25	3.81
	5	5.000	3.50	9.50	1 1/2	24	3.00	3.00	1.28	3.000	3.00	11.00	17.00	13.38	2.25	3.81

[1]NPTF ports are available at no extra charge.
[2]SAE straight thread ports are standard and are indicated by port number.

Style DD – Dimensional and Mounting Data

Bore Ø	Rod No.	MM Rod Ø	Minimum XI[3]		Style DD Minimum Stroke	Add Stroke				ZB Max.
			Styles 4, 8 & 9	Style 55		LG	P	Maximum XI[4]		
								Styles 4, 8 & 9	Style 55	
7.00	1 (std.)	3.000	6.56	9.19	0.13	8.50	5.63	6.44	9.06	12.16
	2	5.000	6.56	10.94	0.13	8.50	5.63	6.44	10.81	12.16
	3	3.500	6.56	9.94	0.13	8.50	5.63	6.44	9.81	12.16
	4	4.000	6.56	10.06	0.13	8.50	5.63	6.44	9.94	12.16
	5	4.500	6.56	10.81	0.13	8.50	5.63	6.44	10.69	12.16
8.00	1 (std.)	3.500	7.06	10.44	0.13	9.50	6.38	6.94	10.31	13.28
	2	5.500	7.06	12.31	0.13	9.50	6.38	6.94	12.19	13.28
	3	4.000	7.06	10.56	0.13	9.50	6.38	6.94	10.44	13.28
	4	4.500	7.06	11.31	0.13	9.50	6.38	6.94	11.19	13.28
	5	5.000	7.06	11.44	0.13	9.50	6.38	6.94	11.31	13.28

[3]Dimension XI to be specified by customer. Reference point for rod end Style 55 is end of piston rod.
[4]Dimensions shown are valid for standard WF and WG dimension.

⚠**PROP 65 WARNING** **WARNING:** This product can expose you to chemicals including **Lead and Lead Compounds** which are known to the State of California to cause cancer and birth defects or other reproductive harm. For more information go to www.P65Warnings.ca.gov

Heavy Duty Intermediate Fixed Trunnion Mounting
Style DE
(NFPA Current Standard Style MT4)

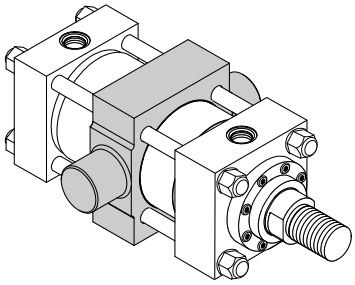

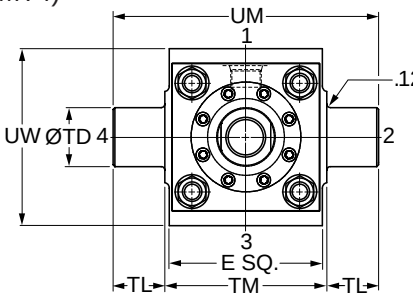

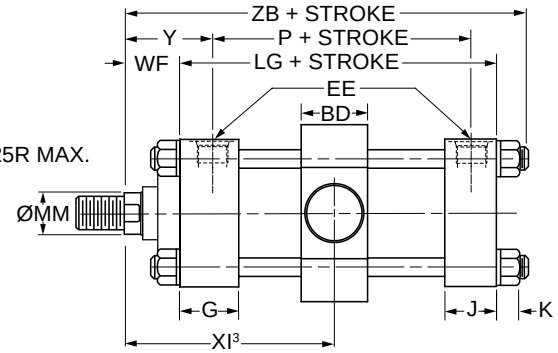

Style DE – Dimensional and Mounting Data

Bore Ø	Rod No.	MM Rod Ø	BD	E	EE		G	J	K Max.	TD Ø +.000 -.002	TL	TM	UM	UW	WF	Y
					NPTF[1]	SAE[2]										
7.00	1 (std.)	3.000	4.000	8.50	1 1/4	20	2.75	2.75	1.16	3.500	2.50	9.75	14.75	11.38	2.25	3.69
	2	5.000	4.000	8.50	1 1/4	20	2.75	2.75	1.16	3.500	2.50	9.75	14.75	11.38	2.25	3.69
	3	3.500	4.000	8.50	1 1/4	20	2.75	2.75	1.16	3.500	2.50	9.75	14.75	11.38	2.25	3.69
	4	4.000	4.000	8.50	1 1/4	20	2.75	2.75	1.16	3.500	2.50	9.75	14.75	11.38	2.25	3.69
	5	4.500	4.000	8.50	1 1/4	20	2.75	2.75	1.16	3.500	2.50	9.75	14.75	11.38	2.25	3.69
8.00	1 (std.)	3.500	4.500	9.50	1 1/2	24	3.00	3.00	1.28	4.000	3.00	11.00	17.00	12.00	2.25	3.81
	2	5.500	4.500	9.50	1 1/2	24	3.00	3.00	1.28	4.000	3.00	11.00	17.00	12.00	2.25	3.81
	3	4.000	4.500	9.50	1 1/2	24	3.00	3.00	1.28	4.000	3.00	11.00	17.00	12.00	2.25	3.81
	4	4.500	4.500	9.50	1 1/2	24	3.00	3.00	1.28	4.000	3.00	11.00	17.00	12.00	2.25	3.81
	5	5.000	4.500	9.50	1 1/2	24	3.00	3.00	1.28	4.000	3.00	11.00	17.00	12.00	2.25	3.81

[1]NPTF ports are available at no extra charge.
[2]SAE straight thread ports are standard and are indicated by port number.

Style DE – Dimensional and Mounting Data

Bore Ø	Rod No.	MM Rod Ø	Minimum XI[3]		Style DE Minimum Stroke	Add Stroke				
			Styles 4, 8 & 9	Style 55		LG	P	Maximum XI[4]		ZB Max.
								Styles 4, 8 & 9	Style 55	
7.00	1 (std.)	3.000	7.06	9.69	1.13	8.50	5.63	5.94	8.56	12.16
	2	5.000	7.06	11.44	1.13	8.50	5.63	5.94	10.31	12.16
	3	3.500	7.06	10.44	1.13	8.50	5.63	5.94	9.31	12.16
	4	4.000	7.06	10.56	1.13	8.50	5.63	5.94	9.44	12.16
	5	4.500	7.06	11.31	1.13	8.50	5.63	5.94	10.19	12.16
8.00	1 (std.)	3.500	7.56	10.94	1.13	9.50	6.38	6.44	9.81	13.28
	2	5.500	7.56	12.81	1.13	9.50	6.38	6.44	11.69	13.28
	3	4.000	7.56	11.06	1.13	9.50	6.38	6.44	9.94	13.28
	4	4.500	7.56	11.81	1.13	9.50	6.38	6.44	10.69	13.28
	5	5.000	7.56	11.94	1.13	9.50	6.38	6.44	10.81	13.28

[3]Dimension XI to be specified by customer. Reference point for rod end Style 55 is end of piston rod.
[4]Dimensions shown are valid for standard WF and WG dimension.

⚠**PROP 65 WARNING** **WARNING:** This product can expose you to chemicals including **Lead and Lead Compounds** which are known to the State of California to cause cancer and birth defects or other reproductive harm. For more information go to www.P65Warnings.ca.gov

Spherical Bearing Mounting
Style SE

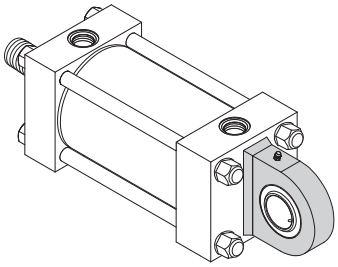

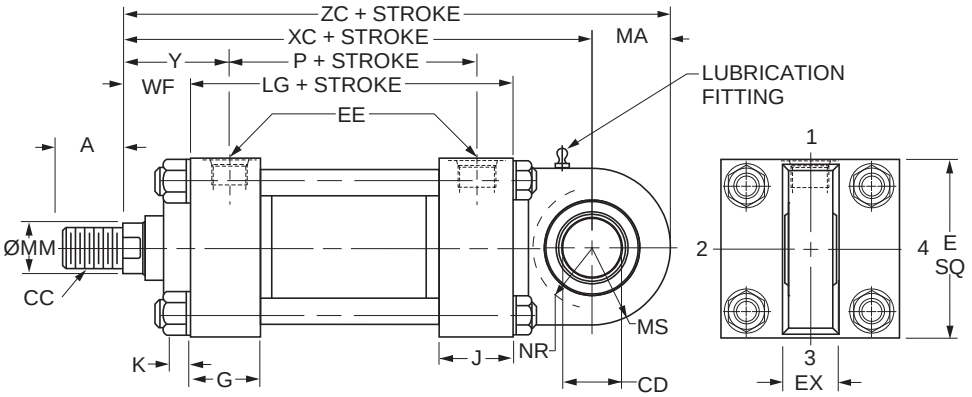

Style SE — Dimensional and Mounting Data

Bore Ø	Rod No.	MM Rod Ø	A	CD[3] Ø +0.0000 -0.0008	E	EE		EX	G	J	K Max.	MS	MA	NR	WF	Y
						NPTF[1]	SAE[2]									
7.00	1 (std.)	3.000	3.50	3.5000	8.50	1 1/4	20	3.06	2.75	2.75	1.16	4.00	4.00	3.68	2.25	3.69
	2	5.000	3.50	3.5000	8.50	1 1/4	20	3.06	2.75	2.75	1.16	4.00	4.00	3.68	2.25	3.69
	3	3.500	3.50	3.5000	8.50	1 1/4	20	3.06	2.75	2.75	1.16	4.00	4.00	3.68	2.25	3.69
	4	4.000	3.50	3.5000	8.50	1 1/4	20	3.06	2.75	2.75	1.16	4.00	4.00	3.68	2.25	3.69
	5	4.500	3.50	3.5000	8.50	1 1/4	20	3.06	2.75	2.75	1.16	4.00	4.00	3.68	2.25	3.69
8.00	1 (std.)	3.500	3.50	4.0000	9.50	1 1/2	24	3.50	3.00	3.00	1.28	4.50	4.50	4.13	2.25	3.81
	2	5.500	3.50	4.0000	9.50	1 1/2	24	3.50	3.00	3.00	1.28	4.50	4.50	4.13	2.25	3.81
	3	4.000	3.50	4.0000	9.50	1 1/2	24	3.50	3.00	3.00	1.28	4.50	4.50	4.13	2.25	3.81
	4	4.500	3.50	4.0000	9.50	1 1/2	24	3.50	3.00	3.00	1.28	4.50	4.50	4.13	2.25	3.81
	5	5.000	3.50	4.0000	9.50	1 1/2	24	3.50	3.00	3.00	1.28	4.50	4.50	4.13	2.25	3.81

[1]NPTF ports are available at no extra charge.
[2]SAE straight thread ports are standard and are indicated by port number.
[3]Dimension CD is pin diameter.

Style SE – Dimensional and Mounting Data

Bore Ø	Rod No.	MM Rod Ø	Thread	A	Add Stroke				
			Style 8 CC[4]		LG	P	XC	XL	ZC
7.00	1 (std.)	3.000	2 3/4-12	3.50	8.50	5.63	15.25	23.25	19.25
	2	5.000	[4]	[4]	8.50	5.63	15.25	23.25	19.25
	3	3.500	[4]	[4]	8.50	5.63	15.25	23.25	19.25
	4	4.000	[4]	[4]	8.50	5.63	15.25	23.25	19.25
	5	4.500	[4]	[4]	8.50	5.63	15.25	23.25	19.25
8.00	1 (std.)	3.500	3 1/4-12	3.50	9.50	6.38	16.75	25.25	21.25
	2	5.500	[4]	[4]	9.50	6.38	16.75	25.25	21.25
	3	4.000	[4]	[4]	9.50	6.38	16.75	25.25	21.25
	4	4.500	[4]	[4]	9.50	6.38	16.75	25.25	21.25
	5	5.000	[4]	[4]	9.50	6.38	16.75	25.25	21.25

[4] To match pin diameter in rod eye and cap, when an oversize rod is required, specify rod end style '3', 'CC' thread and 'A' thread length for the standard rod diameter (Rod No. 1 for the bore), and 'WF' for the oversize rod. Order the rod eye and clevis bracket for the required bore size from the tables on the Style SE Spherical Bearing Accessories page.

Style SE – Recommended maximum swivel angle on each side of the cylinder centerline.

Bore Ø	Head End Mounted		Cap End Mounted	
	Angle a	Tan. of a	Angle a	Tan. of a
7.00	3.00°	0.052	3.00°	0.052
8.00	3.00°	0.052	3.00°	0.052

Note: Dimension X is the maximum off center mounting of the cylinder. To determine dimension X for various stroke lengths multiply the distance between pivot pin holes by tangent of angle a. For extended position use X = XL + 2X stroke.

Mounting Information
Head End Mounting

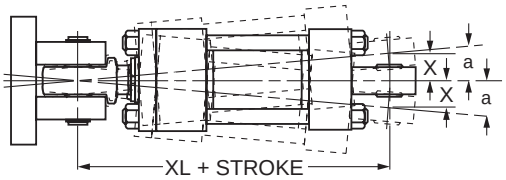

Cap End Mounting

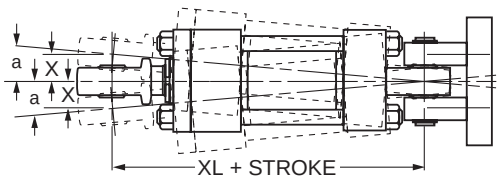

⚠PROP 65 WARNING **WARNING:** This product can expose you to chemicals including **Lead and Lead Compounds** which are known to the State of California to cause cancer and birth defects or other reproductive harm. For more information go to www.P65Warnings.ca.gov

Double Rod Cylinder

Style K

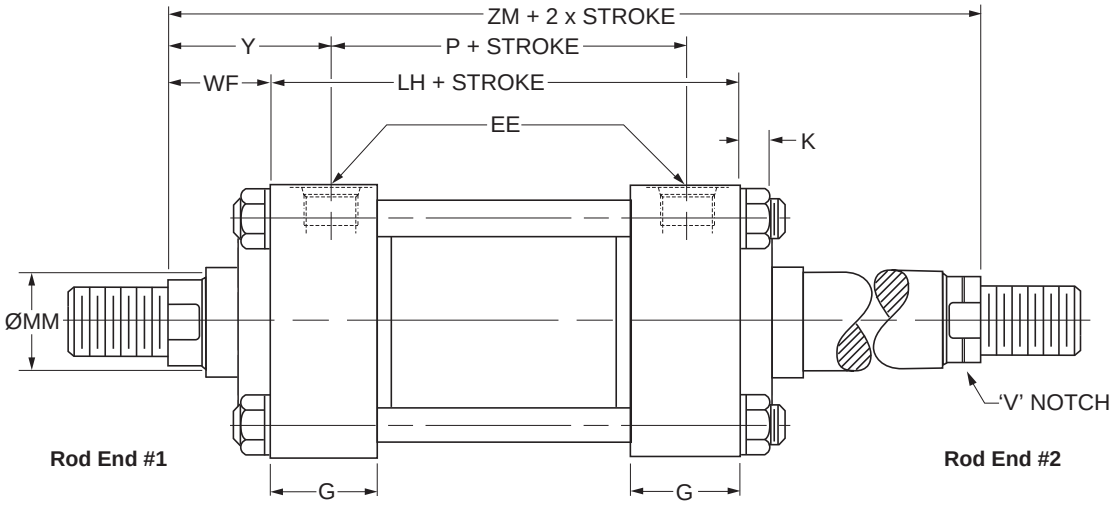

Double Rod End Mounting Styles

See Mounting Groups page in Section H for guidance on double rod end cylinder mounting style selection.

Mounting Styles for Single Rod Models	Mounting Styles for Corresponding Double Rod Models[1]		Dimensions Shown on This Page Supplement Dimensions on 7.00" - 8.00" Bore Pages Listed Below
	Load Connected To Rod On Cylinder Mounting End	Load Connected To Rod Opposite Cylinder Mounting End	
TB	KTB	KTC	72
TD	KTD	KTD	72
J	KJ	KH	73
JB	KJB	KHB	74
JJ	KJJ	KHH	75
C	KC	KC	78
F	KF	KF	78
D	KD	KDB	80
DD	KDD[2]	KDD[2]	82
DE	KDE[2]	KDE[2]	83

[1] Connect load to piston rod without 'V' notch. If only one end of the Double Rod Cylinder is to be cushioned, be sure to clearly specify which end this will be.

[2] Specify XI dimension for Styles DD & DE from #1 rod end (without 'V' notch).

Bore Ø	Rod No.	MM Rod Ø	WF	Add Stroke			Add 2X Stroke
				LH	SNK	SSK	ZM
7.00	1 (std.)	3.00	2.25	8.50	5.38	5.75	13.00
	2	5.00	2.25	8.50	5.38	5.75	13.00
	3	3.50	2.25	8.50	5.38	5.75	13.00
	4	4.00	2.25	8.50	5.38	5.75	13.00
	5	4.50	2.25	8.50	5.38	5.75	13.00
8.00	1 (std.)	3.50	2.25	9.50	6.13	6.75	14.00
	2	5.50	2.25	9.50	6.13	6.75	14.00
	3	4.00	2.25	9.50	6.13	6.75	14.00
	4	4.50	2.25	9.50	6.13	6.75	14.00
	5	5.00	2.25	9.50	6.13	6.75	14.00
Replaces On single rod mounting styles:				**LG**	**SN**	**SS**	–
				All Mtg. Styles	**F**	**C**	**All Mtg. Styles**

How to Use Double Rod Cylinder Dimension Drawings

To determine dimensions for a double rod cylinder, first refer to the desired single rod mounting style cylinder shown on preceding pages of this catalog. (See table above.) After selecting necessary dimensions from that drawing, return to this page supplement the single rod dimensions with those shown on drawing at right and dimension table below. Note that double rod cylinders have a head (Dim. G) at both ends and that dimension LH replaces LG. The double rod dimensions differ from, or are in addition to those for single rod cylinders shown on preceding pages and provide the information needed to completely dimension a double rod cylinder.

On a double rod cylinder where the two rod ends are different, be sure to clearly state which rod end is to be assembled at which end. Port position 1 is standard. If other than standard, specify pos. 2, 3 or 4 when viewed from rod end #1 only. See port position information in Section H.

⚠**PROP 65 WARNING** **WARNING:** This product can expose you to chemicals including **Lead and Lead Compounds** which are known to the State of California to cause cancer and birth defects or other reproductive harm. For more information go to www.P65Warnings.ca.gov

Notes

⚠**PROP 65 WARNING** **WARNING:** This product can expose you to chemicals including **Lead and Lead Compounds** which are known to the State of California to cause cancer and birth defects or other reproductive harm. For more information go to www.P65Warnings.ca.gov

Section D

Series 2HB 1.50"-6.00"/ 3HB 7.00" and 8.00" Bore Heavy Duty Hydraulic Cylinders

	2HB 1.50"-6.00" Bore	3HB 7.00" & 8.00" Bore
Performance	88	88
Specifications, Mounting Styles	89	89
Rod End Styles and Dimensions	90-91	103
T Mount Dimensions	92	104
C Mount Dimensions	93	104
JJ Mount Dimensions	94	105
HH Mount Dimensions	95	105
BB Mount Dimensions	96	106
D Mount Dimensions	97	107
DB Mount Dimensions	98	108
DD Mount Dimensions	99	–
DE Mount Dimensions	99	109
Style SB Spherical Bearing Mounting	100	–
Style SE Spherical Bearing Mounting	101	110
Double Rod Cylinders / Gland Retention	102	111
3HB 8" Bore Threaded Flange	–	112

⚠ **PROP 65 WARNING** **WARNING:** This product can expose you to chemicals including **Lead and Lead Compounds** which are known to the State of California to cause cancer and birth defects or other reproductive harm. For more information go to www.P65Warnings.ca.gov

Parker Hannifin Corporation
Cylinder Division
Des Plaines, Illinois USA

Parker Series 2HB 1.50"-6.00" and 3HB 7.00" & 8.00" Bore Heavy Duty Hydraulic Cylinders



Series 2HB 1.50"-6.00" and 3HB 7.00" & 8.00" bore cylinders are envelope pressure rated at 3,000 psi across the entire bore size and mounting style range. Non-tie rod construction with bolt-on gland and robust Tri-Lip rod sealing system offer superior performance. Head and cap are bolted to flanges that are threaded to each end of the cylinder body and offer several lifetime ownership advantages.

- Improved fatigue life compared to welded flange construction
- Easier to service than tie rod styles
- Clean appearance improves machine aesthetics
- Lower weight in longer strokes

Primary Seal – Polyurethane Tri-Lip Rod Seal is a proven leak proof design – completely self-compensating and self-relieving to withstand variations and conform to mechanical deflection that may occur. Alternative seal materials are available to suit your application.

Secondary Seal – Polyurethane Rod Wiper – wipes clean any oil film adhering to the rod on the extend stroke and cleans the rod on the return stroke.

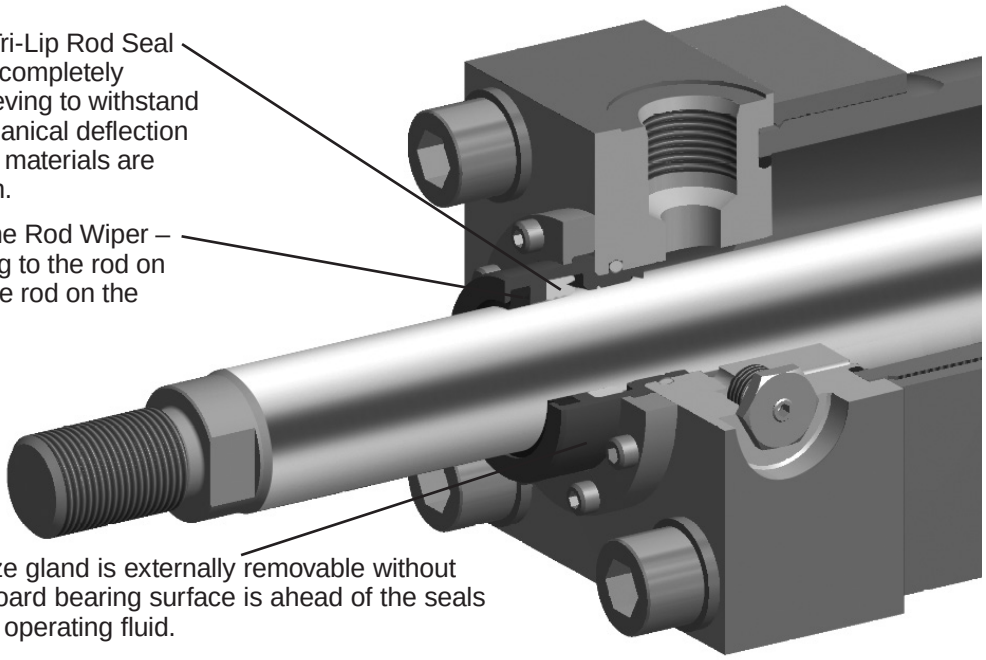

Rod Gland Assembly – Bronze gland is externally removable without cylinder disassembly. Long inboard bearing surface is ahead of the seals assuring lubrication by cylinder operating fluid.

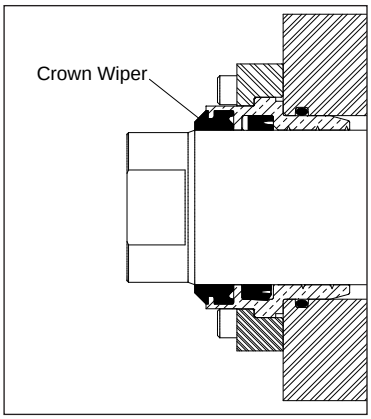

Parker Crown Wiper™ for Series 2HB 1.50"-6.00" and 3HB 7.00" & 8.00" bore – For environments that contain fine abrasive particulate specify the Crown Wiper option. The Crown Wiper is a proven superior alternative to piston rod end boots or metallic wipers that can ingest particulate. It has a sharp leading edge to effectively clean the piston rod and a beveled shape to prevent contaminant intrusion by channeling it away from the gland. It also acts as a secondary seal to wipe clean any oil film adhering to the rod on the extend stroke.

⚠PROP 65 WARNING **WARNING:** This product can expose you to chemicals including **Lead and Lead Compounds** which are known to the State of California to cause cancer and birth defects or other reproductive harm. For more information go to www.P65Warnings.ca.gov

Standard Specifications

- Heavy Duty Service – ANSI/(NFPA) T3.6.7R3 - 2009 Specifications and Mounting Dimension Standards
- Standard Construction – Square Head – Bolted Design
- Nominal Pressure – 3000 psi[1]
- Standard Fluid – Hydraulic Oil
- Standard Temperature – –10°F to +165°F[2]
- Bore Diameters – 1.50" through 8.00"
- Piston Rod Diameter – 0.625" through 5.500"
- Mounting Styles – 11 standard styles at various application ratings
- Strokes – Available in any practical stroke length. See 2H & 3H Family Model Number / How to Order page for Series 2HB & 3HB minimum stroke lengths.
- Cushions – Optional at either end or both ends of stroke. "Float Check" standard at cap end of 1.50" - 6.00" bore.
- Rod Ends – Four Standard Choices – Specials to Order

In line with our policy of continuing product improvement, specifications in this catalog are subject to change.

Note: Series 2HB and 3HB Hydraulic Cylinders fully meet ANSI/(NFPA) T3.6.7R3 - 2009 Specifications and Mounting Dimension Standards for Square Head Industrial Fluid Power Cylinders.

[1] If hydraulic operating pressure exceeds 3000 psi, send application data for engineering evaluation and recommendation. See Section H for actual design factors.

[2] See Section H for higher temperature service.

Available Mounting Styles

Most of the illustrated mounting styles below are available in double rod cylinders.

Basic
Style T
1.50" - 8.00"

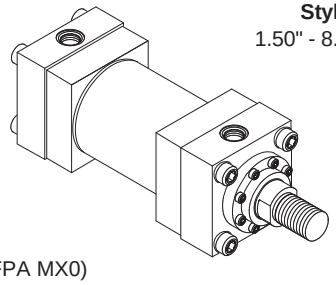

(NFPA MX0)

Side Lug
Style C
1.50" - 8.00"

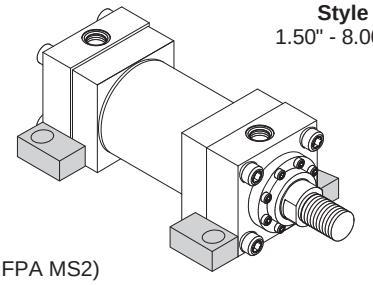

(NFPA MS2)

Head Rectangular
Style JJ
1.50" - 8.00"

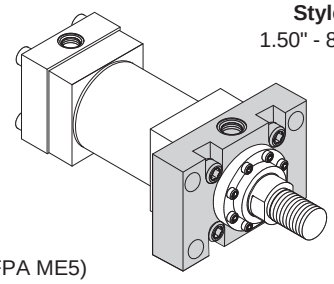

(NFPA ME5)

Cap Rectangular
Style HH
1.50" - 8.00"

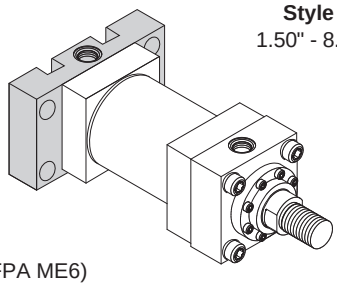

(NFPA ME6)

Cap Fixed Clevis
Style BB
1.50" - 8.00"

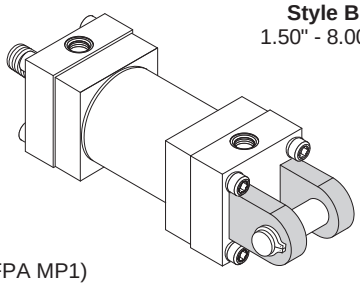

(NFPA MP1)

Head Trunnion
Style D
1.50" - 7.00"

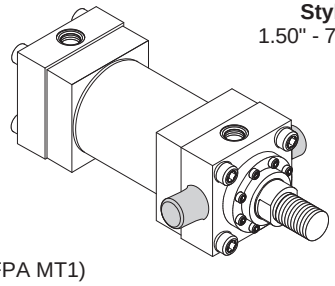

(NFPA MT1)

Cap Trunnion
Style DB
1.50" - 7.00"

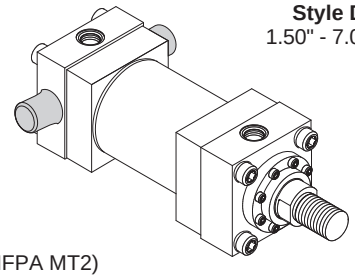

(NFPA MT2)

Intermediate Fixed Trunnion
Style DD
1.50" - 3.25"

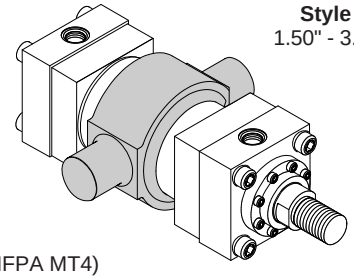

(NFPA MT4)

HD Intermediate Fixed Trunnion
Style DE
4.00" - 8.00"

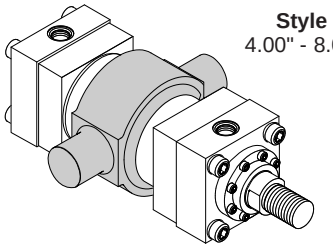

Style DE conforms to NFPA dimensional standard.

Spherical Bearing
Style SB
1.50" - 6.00"

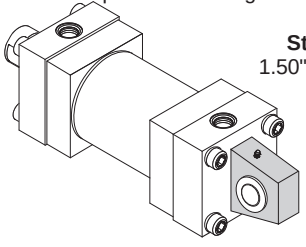

HD Spherical Bearing
Style SE
1.50" - 8.00"

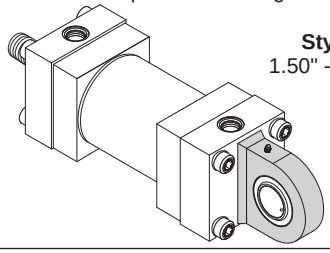

Double Rod Cylinders
Style KT
Shown
1.50" - 8.00"

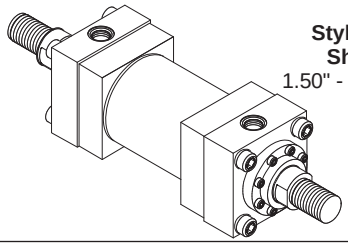

⚠PROP 65 WARNING **WARNING:** This product can expose you to chemicals including **Lead and Lead Compounds** which are known to the State of California to cause cancer and birth defects or other reproductive harm. For more information go to www.P65Warnings.ca.gov

Rod End Dimensions – circular bolt-on retainer construction

Thread Style 4 (NFPA Style SM)
Small Male

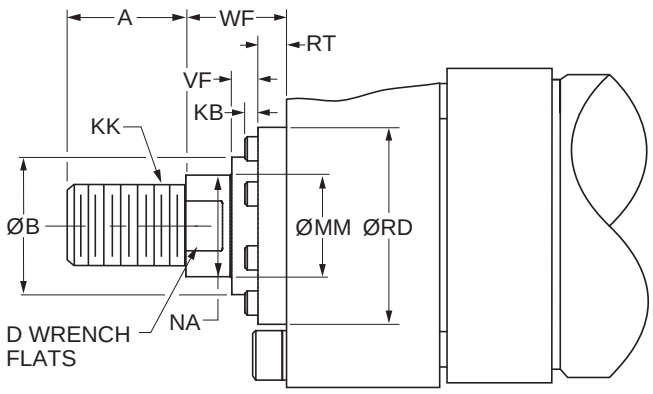

Thread Style 8 (NFPA Style IM)
Intermediate Male

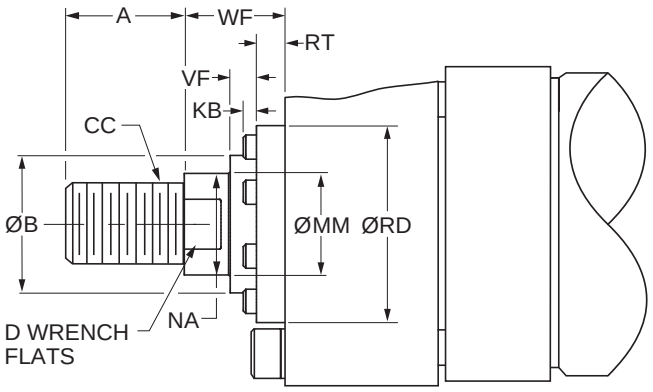

See Gland Retention page to determine which bore, rod and mounting style combinations have circular bolt-on retainers and which have tie rod retained glands.

Rod End Dimensions

Bore Ø	Rod No.	MM Rod Ø	Thread		A	B Ø +.000 -.002	D	F	KB	NA	RD	RT	V	VF	W	WF
			Style 8 CC	Style 4 KK												
1.50	1 (Std.)	0.625	1/2-20	7/16-20	0.75	1.124	0.50	0.38	0.03	0.56	1.94	0.36	0.25	0.27	0.63	1.00
	2	1.000	7/8-14	3/4-16	1.13	1.499	0.88	0.38	0.03	0.94	2.38	0.36	0.50	0.52	1.00	1.38
2.00	1 (Std.)	1.000	7/8-14	3/4-16	1.13	1.499	0.88	0.63	0.03	0.94	2.38	0.36	0.25	0.52	0.75	1.38
	2	1.375	1 1/4-12	1-14	1.63	1.999	1.13	0.63	0.19	1.31	2.87	0.36	0.38	0.64	1.00	1.63
2.50	1 (Std.)	1.000	7/8-14	3/4-16	1.13	1.499	0.88	0.63	0.03	0.94	2.38	0.36	0.25	0.52	0.75	1.38
	2	1.750	1 1/2-12	1 1/4-12	2.00	2.374	1.50	0.63	0.03	1.69	3.47	0.60	0.50	0.53	1.25	1.88
	3	1.375	1 1/4-12	1-14	1.63	1.999	1.13	0.63	0.19	1.31	2.87	0.36	0.38	0.64	1.00	1.63
3.25	1 (Std.)	1.375	1 1/4-12	1-14	1.63	1.999	1.13	0.75	0.19	1.31	2.87	0.36	0.25	0.64	0.88	1.63
	2	2.000	1 3/4-12	1 1/2-12	2.25	2.624	1.69	0.75	0.13	1.94	3.72	0.60	0.38	0.53	1.25	2.00
	3	1.750	1 1/2-12	1 1/4-12	2.00	2.374	1.50	0.75	0.03	1.69	3.47	0.60	0.38	0.53	1.13	1.88
4.00	1 (Std.)	1.750	1 1/2-12	1 1/4-12	2.00	2.374	1.50	0.88	0.03	1.69	3.47	0.60	0.25	0.53	1.00	1.88
	2	2.500	2 1/4-12	1 7/8-12	3.00	3.124	2.06	0.88	0.25	2.38	4.25	0.60	0.38	0.65	1.38	2.25
	3	2.000	1 3/4-12	1 1/2-12	2.25	2.624	1.69	0.88	0.13	1.94	3.72	0.60	0.25	0.53	1.13	2.00
5.00	1 (Std.)	2.000	1 3/4-12	1 1/2-12	2.25	2.624	1.69	0.88	0.13	1.94	3.72	0.60	0.25	0.53	1.13	2.00
	2	3.500	3 1/4-12	2 1/2-12	3.50	4.249	3.00	0.88	-	3.38	5.76	0.91	0.38	0.34	1.38	2.25
	3	2.500	2 1/4-12	1 7/8-12	3.00	3.124	2.06	0.88	0.25	2.38	4.25	0.60	0.38	0.65	1.38	2.25
	4	3.000	2 3/4-12	2 1/4-12	3.50	3.749	2.63	0.88	-	2.88	5.26	0.85	0.38	0.41	1.38	2.25
6.00	1 (Std.)	2.500	2 1/4-12	1 7/8-12	3.00	3.124	2.06	1.00	0.25	2.38	4.25	0.60	0.25	0.65	1.25	2.25
	2	4.000	3 3/4-12	3-12	4.00	4.749	3.38	1.00	-	3.88	6.31	0.91	0.25	0.34	1.25	2.25
	3	3.000	2 3/4-12	2 1/4-12	3.50	3.749	2.63	1.00	-	2.88	5.26	0.85	0.25	0.41	1.25	2.25
	4	3.500	3 1/4-12	2 1/2-12	3.50	4.249	3.00	1.00	-	3.38	5.76	0.91	0.25	0.34	1.25	2.25

"Special" Thread Style 3

Special thread, extension, rod eye, blank, etc., are also available.

To order, specify "Style 3" and give desired dimensions for KK, A, W or WF. If otherwise special, furnish dimensioned sketch.

Tie Rod Retained Gland

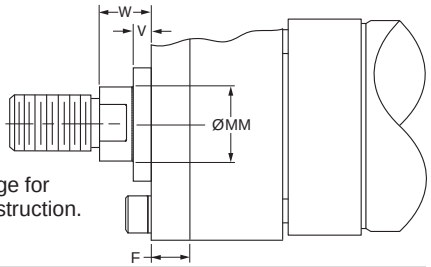

See Gland Retention page for styles that have this construction.

⚠PROP 65 WARNING **WARNING:** This product can expose you to chemicals including **Lead and Lead Compounds** which are known to the State of California to cause cancer and birth defects or other reproductive harm. For more information go to www.P65Warnings.ca.gov

Rod End Dimensions – circular bolt-on retainer construction

Thread Style 9[2]
(NFPA Style SF) Small Female

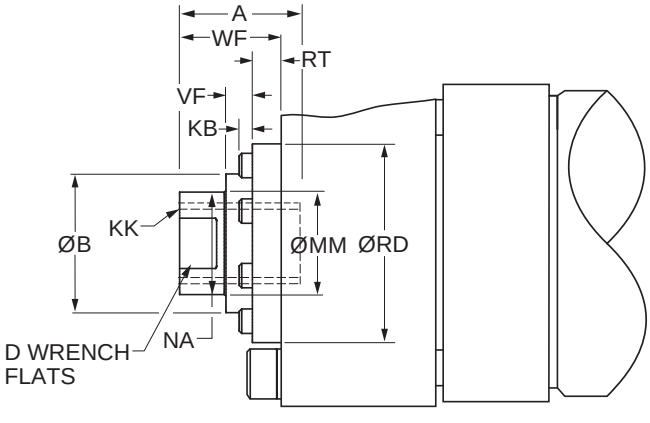

Style 55[1]
Flanged Rod End

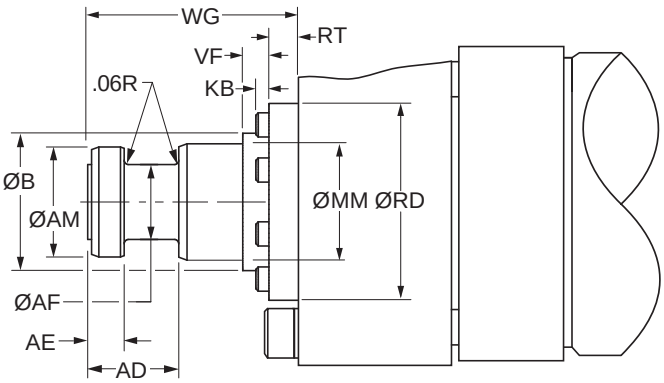

See Gland Retention page to determine which bore, rod and mounting style combinations have circular bolt-on retainers and which have tie rod retained glands.

Rod End Dimensions

Bore Ø	Rod No.	MM Rod Ø	Thread Style 9 KK	A	AD	AE +.001 -.001	AF Ø	AM Ø	B Ø +.000 -.002	D	KB	NA	RD	RT	VF	WF	WG
1.50	1 (Std.)	0.625	7/16-20	0.75	0.63	0.249	0.38	0.57	1.124	0.50	0.03	0.56	1.94	0.36	0.27	1.00	1.75
	2	1.000	3/4-16	1.13	0.94	0.374	0.69	0.95	1.499	0.88	0.03	0.94	2.38	0.36	0.52	1.38	2.38
2.00	1 (Std.)	1.000	3/4-16	1.13	0.94	0.374	0.69	0.95	1.499	0.88	0.03	0.94	2.38	0.36	0.52	1.38	2.38
	2	1.375	1-14	1.63	1.06	0.374	0.88	1.32	1.999	1.13	0.19	1.31	2.87	0.36	0.64	1.63	2.75
2.50	1 (Std.)	1.000	3/4-16	1.13	0.94	0.374	0.69	0.95	1.499	0.88	0.03	0.94	2.38	0.36	0.52	1.38	2.38
	2	1.750	1 1/4-12	2.00	1.31	0.499	1.13	1.70	2.374	1.50	0.03	1.69	3.47	0.60	0.53	1.88	3.13
	3	1.375	1-14	1.63	1.06	0.374	0.88	1.32	1.999	1.13	0.19	1.31	2.87	0.36	0.64	1.63	2.75
3.25	1 (Std.)	1.375	1-14	1.63	1.06	0.374	0.88	1.32	1.999	1.13	0.19	1.31	2.87	0.36	0.64	1.63	2.75
	2	2.000	1 1/2-12	2.25	1.69	0.624	1.38	1.95	2.624	1.69	0.13	1.94	3.72	0.60	0.53	2.00	3.75
	3	1.750	1 1/4-12	2.00	1.31	0.499	1.13	1.70	2.374	1.50	0.03	1.69	3.47	0.60	0.53	1.88	3.13
4.00	1 (Std.)	1.750	1 1/4-12	2.00	1.31	0.499	1.13	1.70	2.374	1.50	0.03	1.69	3.47	0.60	0.53	1.88	3.13
	2	2.500	1 7/8-12	3.00	1.94	0.749	1.75	2.45	3.124	2.06	0.25	2.38	4.25	0.60	0.65	2.25	4.50
	3	2.000	1 1/2-12	2.25	1.69	0.624	1.38	1.95	2.624	1.69	0.13	1.94	3.72	0.60	0.53	2.00	3.75
5.00	1 (Std.)	2.000	1 1/2-12	2.25	1.69	0.624	1.38	1.95	2.624	1.69	0.13	1.94	3.72	0.60	0.53	2.00	3.75
	2	3.500	2 1/2-12	3.50	2.69	0.999	2.50	3.45	4.249	3.00	-	3.38	5.76	0.91	0.34	2.25	5.63
	3	2.500	1 7/8-12	3.00	1.94	0.749	1.75	2.45	3.124	2.06	0.25	2.38	4.25	0.60	0.65	2.25	4.50
	4	3.000	2 1/4-12	3.50	2.44	0.874	2.25	2.95	3.749	2.63	-	2.88	5.26	0.85	0.41	2.25	4.88
6.00	1 (Std.)	2.500	1 7/8-12	3.00	1.94	0.749	1.75	2.45	3.124	2.06	0.25	2.38	4.25	0.60	0.65	2.25	4.50
	2	4.000	3-12	4.00	2.69	0.999	3.00	3.95	4.749	3.38	-	3.88	6.31	0.91	0.34	2.25	5.75
	3	3.000	2 1/4-12	3.50	2.44	0.874	2.25	2.95	3.749	2.63	-	2.88	5.26	0.85	0.41	2.25	4.88
	4	3.500	2 1/2-12	3.50	2.69	0.999	2.50	3.45	4.249	3.00	-	3.38	5.76	0.91	0.34	2.25	5.63

"Special" Thread Style 3

Special thread, extension, rod eye, blank, etc., are also available.

To order, specify "Style 3" and give desired dimensions for KK, A, W or WF. If otherwise special, furnish dimensioned sketch.

[1] For special WG dimension, specify "Style 3" and give desired dimension for WG. For other changes, place "S" in the model code, and describe rod end with dimensioned sketch.

[2] Style 9 stroke restrictions may apply. See Style 9 Minimum Stroke Table on How to Order page for details.

Tie Rod Retained Gland

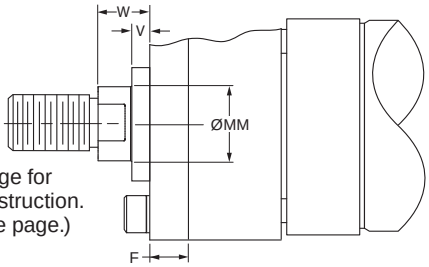

See Gland Retention page for styles that have this construction. (Dimensions on opposite page.)

⚠PROP 65 WARNING **WARNING:** This product can expose you to chemicals including **Lead and Lead Compounds** which are known to the State of California to cause cancer and birth defects or other reproductive harm. For more information go to www.P65Warnings.ca.gov

Basic Mounting
Style T
(NFPA Style MX0)

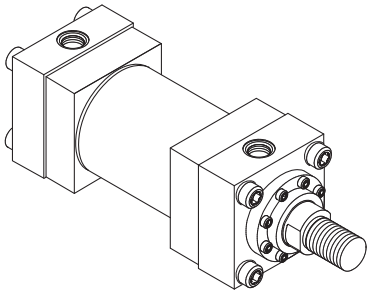

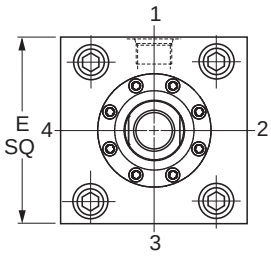

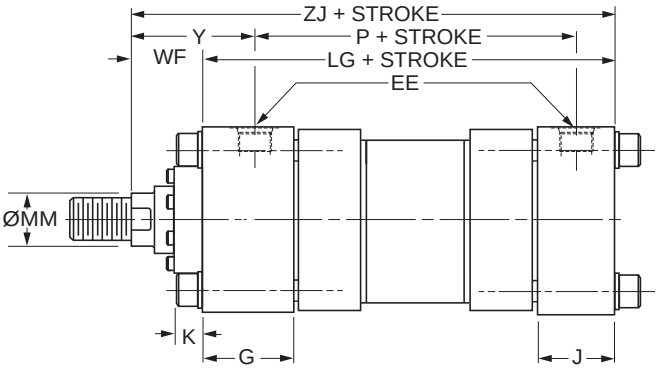

Style T – Dimensional and Mounting Data

Bore Ø	Rod No.	MM Rod Ø	E	EE		G	J	K Max.	WF	Y	Add Stroke		
				NPTF[1]	SAE[2]						LG	P	ZJ
1.50	1 (std.)	0.625	2.50	1/2	10	1.75	1.50	0.50	1.00	2.00	4.63	2.88	5.63
	2	1.000	2.50	1/2	10	1.75	1.50	0.50	1.38	2.38	4.63	2.88	6.00
2.00	1 (std.)	1.000	3.00	1/2	10	1.75	1.50	0.67	1.38	2.38	4.63	2.88	6.00
	2	1.375	3.00	1/2	10	1.75	1.50	0.67	1.63	2.63	4.63	2.88	6.25
2.50	1 (std.)	1.000	3.50	1/2	10	1.75	1.50	0.67	1.38	2.38	4.75	3.00	6.13
	2	1.750	3.50	1/2	10	1.75	1.50	0.67	1.88	2.88	4.75	3.00	6.63
	3	1.375	3.50	1/2	10	1.75	1.50	0.67	1.63	2.63	4.75	3.00	6.38
3.25	1 (std.)	1.375	4.50	3/4	12	2.00	1.75	0.83	1.63	2.75	5.50	3.50	7.13
	2	2.000	4.50	3/4	12	2.00	1.75	0.83	2.00	3.13	5.50	3.50	7.50
	3	1.750	4.50	3/4	12	2.00	1.75	0.83	1.88	3.00	5.50	3.50	7.38
4.00	1 (std.)	1.750	5.00	3/4	12	2.00	1.75	0.83	1.88	3.00	5.75	3.75	7.63
	2	2.500	5.00	3/4	12	2.00	1.75	0.83	2.25	3.38	5.75	3.75	8.00
	3	2.000	5.00	3/4	12	2.00	1.75	0.83	2.00	3.13	5.75	3.75	7.75
5.00	1 (std.)	2.000	6.50	3/4	12	2.00	1.75	1.11	2.00	3.13	6.25	4.25	8.25
	2	3.500	6.50	3/4	12	2.00	1.75	1.11	2.25	3.38	6.25	4.25	8.50
	3	2.500	6.50	3/4	12	2.00	1.75	1.11	2.25	3.38	6.25	4.25	8.50
	4	3.000	6.50	3/4	12	2.00	1.75	1.11	2.25	3.38	6.25	4.25	8.50
6.00	1 (std.)	2.500	7.50	1	16	2.25	2.25	1.25	2.25	3.50	7.38	4.88	9.63
	2	4.000	7.50	1	16	2.25	2.25	1.25	2.25	3.50	7.38	4.88	9.63
	3	3.000	7.50	1	16	2.25	2.25	1.25	2.25	3.50	7.38	4.88	9.63
	4	3.500	7.50	1	16	2.25	2.25	1.25	2.25	3.50	7.38	4.88	9.63

[1]NPTF ports are available at no extra charge.
[2]SAE straight thread ports are standard and are indicated by port number.

⚠**PROP 65 WARNING** **WARNING:** This product can expose you to chemicals including **Lead and Lead Compounds** which are known to the State of California to cause cancer and birth defects or other reproductive harm. For more information go to www.P65Warnings.ca.gov

Side Lug Mounting
Style C
(NFPA Style MS2)

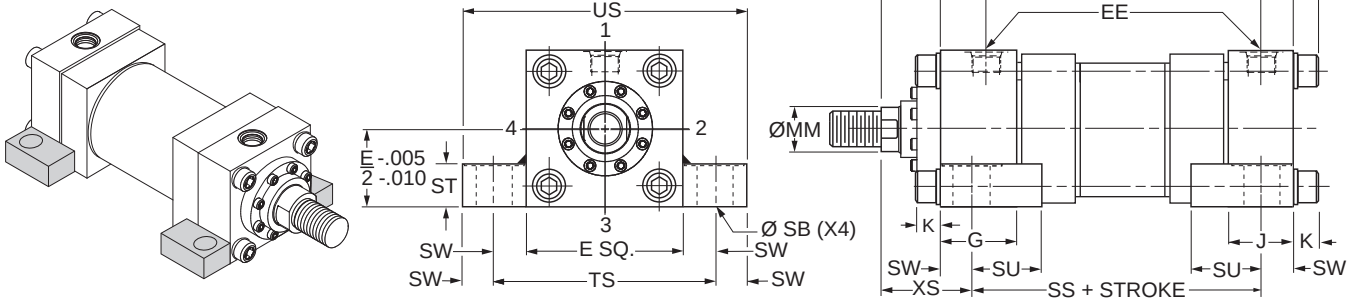

Style C – Dimensional and Mounting Data

Bore Ø	E	EE		G	J	K Max.	SB[3] Ø	ST	SU	SW	TS	US	Add Stroke		
		NPTF[1]	SAE[2]										LG	P	SS
1.50	2.50	1/2	10	1.75	1.50	0.50	0.44	0.50	0.94	0.38	3.25	4.00	4.63	2.88	3.88
2.00	3.00	1/2	10	1.75	1.50	0.67	0.56	0.75	1.25	0.50	4.00	5.00	4.63	2.88	3.63
2.50	3.50	1/2	10	1.75	1.50	0.67	0.81	1.00	1.56	0.69	4.88	6.25	4.75	3.00	3.38
3.25	4.50	3/4	12	2.00	1.75	0.83	0.81	1.00	1.56	0.69	5.88	7.25	5.50	3.50	4.13
4.00	5.00	3/4	12	2.00	1.75	0.83	1.06	1.25	2.00	0.88	6.75	8.50	5.75	3.75	4.00
5.00	6.50	3/4	12	2.00	1.75	1.11	1.06	1.25	2.00	0.88	8.25	10.00	6.25	4.25	4.50
6.00	7.50	1	16	2.25	2.25	1.25	1.31	1.50	2.50	1.13	9.75	12.00	7.38	4.88	5.13

[1]NPTF ports are available at no extra charge.
[2]SAE straight thread ports are standard and are indicated by port number.
[3]Upper surface spot faced for socket head screws.

Style C – Dimensional and Mounting Data

Bore Ø	Rod No.	MM Rod Ø	WF	XS	Y	Add Stroke
						ZB Max.
1.50	1 (std.)	0.625	1.00	1.38	2.00	6.13
	2	1.000	1.38	1.75	2.38	6.50
2.00	1 (std.)	1.000	1.38	1.88	2.38	6.68
	2	1.375	1.63	2.13	2.63	6.92
2.50	1 (std.)	1.000	1.38	2.06	2.38	6.80
	2	1.750	1.88	2.56	2.88	7.30
	3	1.375	1.63	2.31	2.63	7.05
3.25	1 (std.)	1.375	1.63	2.31	2.75	7.96
	2	2.000	2.00	2.69	3.13	8.33
	3	1.750	1.88	2.56	3.00	8.21
4.00	1 (std.)	1.750	1.88	2.75	3.00	8.46
	2	2.500	2.25	3.13	3.38	8.83
	3	2.000	2.00	2.88	3.13	8.58
5.00	1 (std.)	2.000	2.00	2.88	3.13	9.36
	2	3.500	2.25	3.13	3.38	9.61
	3	2.500	2.25	3.13	3.38	9.61
	4	3.000	2.25	3.13	3.38	9.61
6.00	1 (std.)	2.500	2.25	3.38	3.50	10.88
	2	4.000	2.25	3.38	3.50	10.88
	3	3.000	2.25	3.38	3.50	10.88
	4	3.500	2.25	3.38	3.50	10.88

⚠**PROP 65 WARNING** **WARNING:** This product can expose you to chemicals including **Lead and Lead Compounds** which are known to the State of California to cause cancer and birth defects or other reproductive harm. For more information go to www.P65Warnings.ca.gov

Head Rectangular Mounting
Style JJ
(NFPA Style ME5)

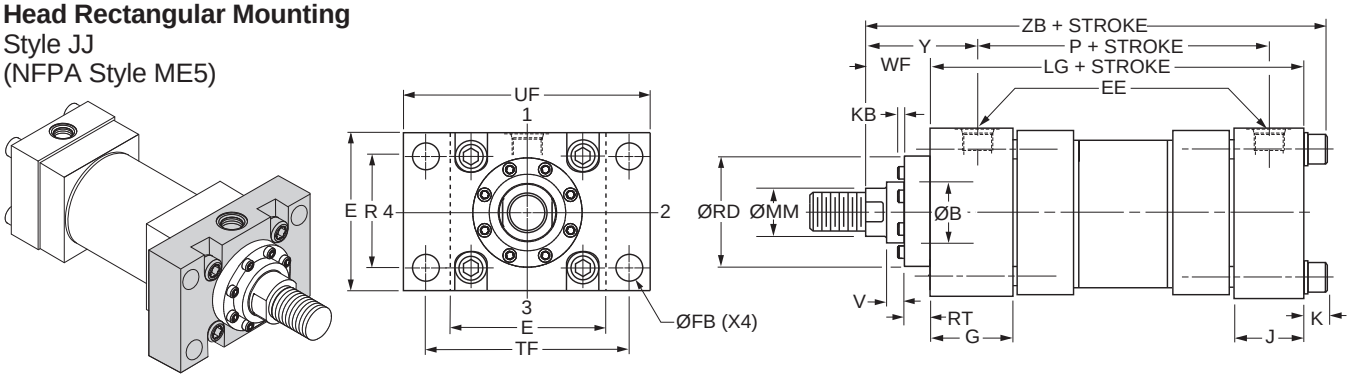

Style JJ – Dimensional and Mounting Data

Bore Ø	E	EE		FB Ø	G	J	K Max.	R	TF	UF	Add Stroke	
		NPTF[1]	SAE[2]								LG	P
1.50	2.50	1/2	10	0.44	1.75	1.50	0.50	1.63	3.44	4.25	4.63	2.88
2.00	3.00	1/2	10	0.56	1.75	1.50	0.67	2.05	4.13	5.13	4.63	2.88
2.50	3.50	1/2	10	0.56	1.75	1.50	0.67	2.55	4.63	5.63	4.75	3.00
3.25	4.50	3/4	12	0.69	2.00	1.75	0.83	3.25	5.88	7.13	5.50	3.50
4.00	5.00	3/4	12	0.69	2.00	1.75	0.83	3.82	6.38	7.63	5.75	3.75
5.00	6.50	3/4	12	0.94	2.00	1.75	1.11	4.95	8.19	9.75	6.25	4.25
6.00	7.50	1	16	1.06	2.25	2.25	1.25	5.73	9.44	11.25	7.38	4.88

[1]NPTF ports are available at no extra charge.
[2]SAE straight thread ports are standard and are indicated by port number.

Style JJ – Dimensional and Mounting Data

Bore Ø	Rod No.	MM Rod Ø	B Ø +.000 -.002	KB	RD Ø	RT	V	WF	Y	Add Stroke
										ZB Max
1.50	1 (std.)	0.625	1.124	0.03	1.94	0.36	0.27	1.00	2.00	6.13
	2	1.000	1.499	0.03	2.38	0.36	0.52	1.38	2.38	6.50
2.00	1 (std.)	1.000	1.499	0.03	2.38	0.36	0.52	1.38	2.38	6.68
	2	1.375	1.999	0.19	2.87	0.36	0.64	1.63	2.63	6.92
2.50	1 (std.)	1.000	1.499	0.03	2.38	0.36	0.52	1.38	2.38	6.80
	2	1.750	2.374	0.03	3.47	0.60	0.53	1.88	2.88	7.30
	3	1.375	1.999	0.19	2.87	0.36	0.64	1.63	2.63	7.05
3.25	1 (std.)	1.375	1.999	0.19	2.87	0.36	0.64	1.63	2.75	7.96
	2	2.000	2.624	0.13	3.72	0.60	0.53	2.00	3.13	8.33
	3	1.750	2.374	0.03	3.47	0.60	0.53	1.88	3.00	8.21
4.00	1 (std.)	1.750	2.374	0.03	3.47	0.60	0.53	1.88	3.00	8.46
	2	2.500	3.124	0.25	4.25	0.60	0.65	2.25	3.38	8.83
	3	2.000	2.624	0.13	3.72	0.60	0.53	2.00	3.13	8.58
5.00	1 (std.)	2.000	2.624	0.13	3.72	0.60	0.53	2.00	3.13	9.36
	2	3.500	4.249	-	5.76	0.91	0.34	2.25	3.38	9.61
	3	2.500	3.124	0.25	4.25	0.60	0.65	2.25	3.38	9.61
	4	3.000	3.749	-	5.26	0.85	0.41	2.25	3.38	9.61
6.00	1 (std.)	2.500	3.124	0.25	4.25	0.60	0.65	2.25	3.50	10.88
	2	4.000	4.749	-	6.31	0.91	0.34	2.25	3.50	10.88
	3	3.000	3.749	-	5.26	0.85	0.41	2.25	3.50	10.88
	4	3.500	4.249	-	5.76	0.91	0.34	2.25	3.50	10.88

⚠**PROP 65 WARNING** **WARNING:** This product can expose you to chemicals including **Lead and Lead Compounds** which are known to the State of California to cause cancer and birth defects or other reproductive harm. For more information go to www.P65Warnings.ca.gov

Cap Rectangular Flange Mounting

Style HH
(NFPA Style ME6)

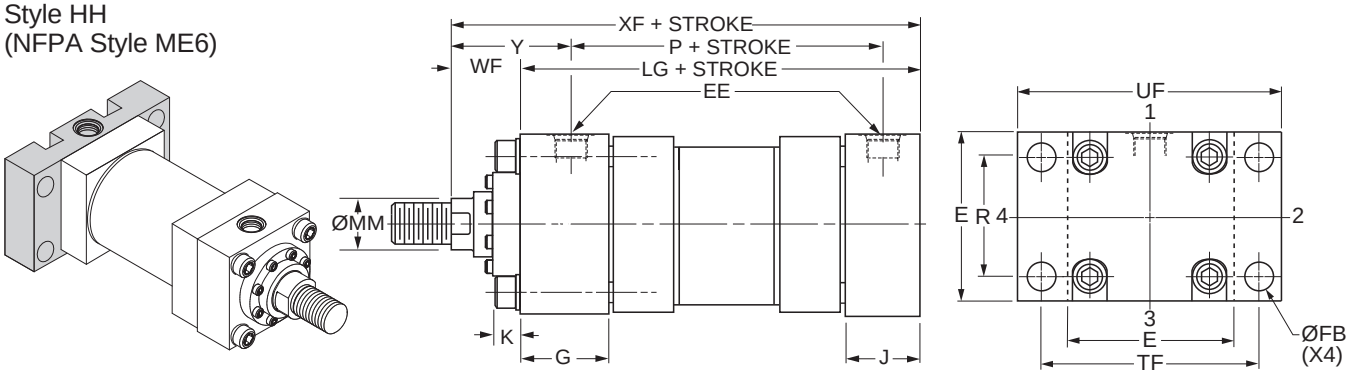

Style HH – Dimensional and Mounting Data

Bore Ø	E	EE		FB Ø	G	J	K Max.	R	TF	UF	Add Stroke	
		NPTF[1]	SAE[2]								LG	P
1.50	2.50	1/2	10	0.44	1.75	1.50	0.50	1.63	3.44	4.25	4.63	2.88
2.00	3.00	1/2	10	0.56	1.75	1.50	0.67	2.05	4.13	5.13	4.63	2.88
2.50	3.50	1/2	10	0.56	1.75	1.50	0.67	2.55	4.63	5.63	4.75	3.00
3.25	4.50	3/4	12	0.69	2.00	1.75	0.83	3.25	5.88	7.13	5.50	3.50
4.00	5.00	3/4	12	0.69	2.00	1.75	0.83	3.82	6.38	7.63	5.75	3.75
5.00	6.50	3/4	12	0.94	2.00	1.75	1.11	4.95	8.19	9.75	6.25	4.25
6.00	7.50	1	16	1.06	2.25	2.25	1.25	5.73	9.44	11.25	7.38	4.88

[1]NPTF ports are available at no extra charge.
[2]SAE straight thread ports are standard and are indicated by port number.

Style HH – Dimensional and Mounting Data

Bore Ø	Rod No.	MM Rod Ø	WF	Y	Add Stroke
					XF
1.50	1 (std.)	0.625	1.00	2.00	5.63
	2	1.000	1.38	2.38	6.00
2.00	1 (std.)	1.000	1.38	2.38	6.00
	2	1.375	1.63	2.63	6.25
2.50	1 (std.)	1.000	1.38	2.38	6.13
	2	1.750	1.88	2.88	6.63
	3	1.375	1.63	2.63	6.38
3.25	1 (std.)	1.375	1.63	2.75	7.13
	2	2.000	2.00	3.13	7.50
	3	1.750	1.88	3.00	7.38
4.00	1 (std.)	1.750	1.88	3.00	7.63
	2	2.500	2.25	3.38	8.00
	3	2.000	2.00	3.13	7.75
5.00	1 (std.)	2.000	2.00	3.13	8.25
	2	3.500	2.25	3.38	8.50
	3	2.500	2.25	3.38	8.50
	4	3.000	2.25	3.38	8.50
6.00	1 (std.)	2.500	2.25	3.50	9.63
	2	4.000	2.25	3.50	9.63
	3	3.000	2.25	3.50	9.63
	4	3.500	2.25	3.50	9.63

⚠**PROP 65 WARNING** **WARNING:** This product can expose you to chemicals including **Lead and Lead Compounds** which are known to the State of California to cause cancer and birth defects or other reproductive harm. For more information go to www.P65Warnings.ca.gov

Cap Fixed Clevis Mounting
Style BB
(NFPA Style MP1)

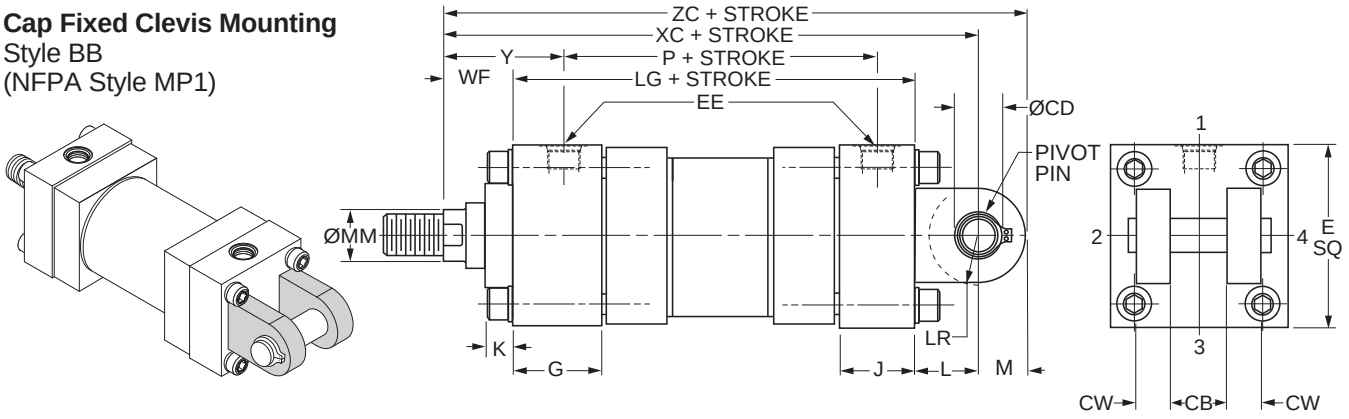

Style BB – Dimensional and Mounting Data

Bore Ø	E	EE		CB	CD[3] Ø +.000 -.002	CW	G	J	K Max.	L	LR	M	Add Stroke	
		NPTF[1]	SAE[2]										LG	P
1.50	2.50	1/2	10	0.75	.501	0.50	1.75	1.50	0.50	0.75	0.56	0.50	4.63	2.88
2.00	3.00	1/2	10	1.25	.751	0.63	1.75	1.50	0.67	1.25	1.00	0.75	4.63	2.88
2.50	3.50	1/2	10	1.25	.751	0.63	1.75	1.50	0.67	1.25	0.94	0.75	4.75	3.00
3.25	4.50	3/4	12	1.50	1.001	0.75	2.00	1.75	0.83	1.50	1.25	1.00	5.50	3.50
4.00	5.00	3/4	12	2.00	1.376	1.00	2.00	1.75	0.83	2.13	1.75	1.38	5.75	3.75
5.00	6.50	3/4	12	2.50	1.751	1.25	2.00	1.75	1.11	2.25	2.06	1.75	6.25	4.25
6.00	7.50	1	16	2.50	2.001	1.25	2.25	2.25	1.25	2.50	2.31	2.00	7.38	4.88

[1]NPTF ports are available at no extra charge.
[2]SAE straight thread ports are standard and are indicated by port number.
[3]Diameter CD is Pin Diameter.

Style BB – Dimensional and Mounting Data

Bore Ø	Rod No.	MM Rod Ø	WF	Y	Add Stroke	
					XC	ZC
1.50	1 (std.)	0.625	1.00	2.00	6.38	6.88
	2	1.000	1.38	2.38	6.75	7.25
2.00	1 (std.)	1.000	1.38	2.38	7.25	8.00
	2	1.375	1.63	2.63	7.50	8.25
2.50	1 (std.)	1.000	1.38	2.38	7.38	8.13
	2	1.750	1.88	2.88	7.88	8.63
	3	1.375	1.63	2.63	7.63	8.38
3.25	1 (std.)	1.375	1.63	2.75	8.63	9.63
	2	2.000	2.00	3.13	9.00	10.00
	3	1.750	1.88	3.00	8.88	9.88
4.00	1 (std.)	1.750	1.88	3.00	9.75	11.13
	2	2.500	2.25	3.38	10.13	11.50
	3	2.000	2.00	3.13	9.88	11.25
5.00	1 (std.)	2.000	2.00	3.13	10.50	12.25
	2	3.500	2.25	3.38	10.75	12.50
	3	2.500	2.25	3.38	10.75	12.50
	4	3.000	2.25	3.38	10.75	12.50
6.00	1 (std.)	2.500	2.25	3.50	12.13	14.13
	2	4.000	2.25	3.50	12.13	14.13
	3	3.000	2.25	3.50	12.13	14.13
	4	3.500	2.25	3.50	12.13	14.13

⚠**PROP 65 WARNING** **WARNING:** This product can expose you to chemicals including **Lead and Lead Compounds** which are known to the State of California to cause cancer and birth defects or other reproductive harm. For more information go to www.P65Warnings.ca.gov

Head Trunnion Mounting
Style D
(NFPA Style MT1)

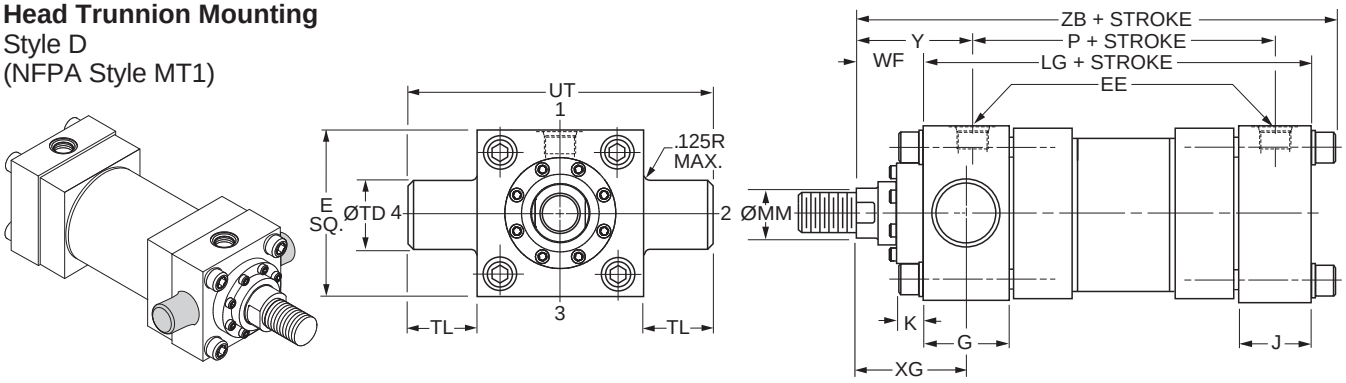

Style D – Dimensional and Mounting Data

Bore Ø	E	EE		G	J	K Max.	TD Ø +.000 -.001	TL	UT	Add Stroke	
		NPTF[1]	SAE[2]							LG	P
1.50	2.50	1/2	10	1.75	1.50	0.50	1.000	1.00	4.50	4.63	2.88
2.00	3.00	1/2	10	1.75	1.50	0.67	1.375	1.38	5.75	4.63	2.88
2.50	3.50	1/2	10	1.75	1.50	0.67	1.375	1.38	6.25	4.75	3.00
3.25	4.50	3/4	12	2.00	1.75	0.83	1.750	1.75	8.00	5.50	3.50
4.00	5.00	3/4	12	2.00	1.75	0.83	1.750	1.75	8.50	5.75	3.75
5.00	6.50	3/4	12	2.00	1.75	1.11	1.750	1.75	10.00	6.25	4.25
6.00	7.50	1	16	2.25	2.25	1.25	2.000	2.00	11.50	7.38	4.88

[1]NPTF ports are available at no extra charge.
[2]SAE straight thread ports are standard and are indicated by port number.

Style D – Dimensional and Mounting Data

Bore Ø	Rod No.	MM Rod Ø	WF	XG	Y	Add Stroke
						ZB Max.
1.50	1 (std.)	0.625	1.00	1.88	2.00	6.13
	2	1.000	1.38	2.25	2.38	6.50
2.00	1 (std.)	1.000	1.38	2.25	2.38	6.68
	2	1.375	1.63	2.50	2.63	6.92
2.50	1 (std.)	1.000	1.38	2.25	2.38	6.80
	2	1.750	1.88	2.75	2.88	7.30
	3	1.375	1.63	2.50	2.63	7.05
3.25	1 (std.)	1.375	1.63	2.63	2.75	7.96
	2	2.000	2.00	3.00	3.13	8.33
	3	1.750	1.88	2.88	3.00	8.21
4.00	1 (std.)	1.750	1.88	2.88	3.00	8.46
	2	2.500	2.25	3.25	3.38	8.83
	3	2.000	2.00	3.00	3.13	8.58
5.00	1 (std.)	2.000	2.00	3.00	3.13	9.36
	2	3.500	2.25	3.25	3.38	9.61
	3	2.500	2.25	3.25	3.38	9.61
	4	3.000	2.25	3.25	3.38	9.61
6.00	1 (std.)	2.500	2.25	3.38	3.50	10.88
	2	4.000	2.25	3.38	3.50	10.88
	3	3.000	2.25	3.38	3.50	10.88
	4	3.500	2.25	3.38	3.50	10.88

⚠**PROP 65 WARNING** **WARNING:** This product can expose you to chemicals including **Lead and Lead Compounds** which are known to the State of California to cause cancer and birth defects or other reproductive harm. For more information go to www.P65Warnings.ca.gov

Cap Trunnion Mounting
Style DB
(NFPA Style MT2)

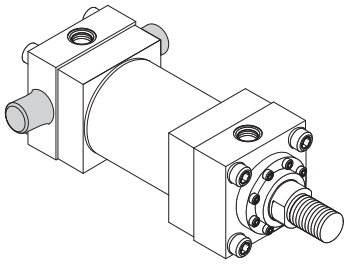

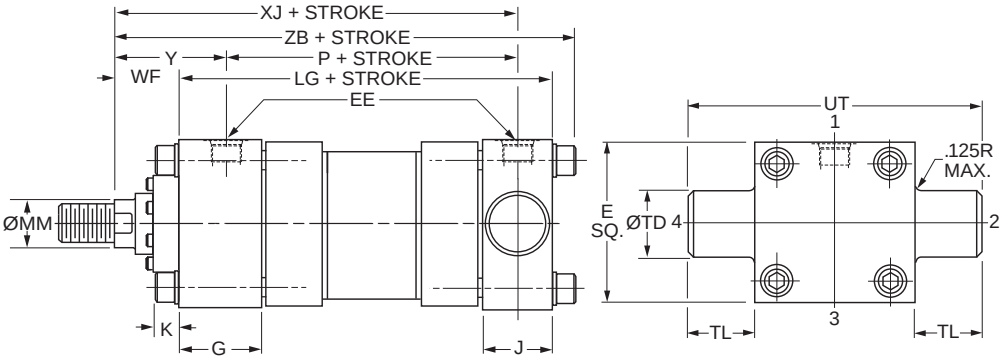

Style DB – Dimensional and Mounting Data

Bore Ø	E	EE		G	J	K Max.	TD Ø +.000 -.001	TL	UT	Add Stroke	
		NPTF[1]	SAE[2]							LG	P
1.50	2.50	1/2	10	1.75	1.50	0.50	1.000	1.00	4.50	4.63	2.88
2.00	3.00	1/2	10	1.75	1.50	0.67	1.375	1.38	5.75	4.63	2.88
2.50	3.50	1/2	10	1.75	1.50	0.67	1.375	1.38	6.25	4.75	3.00
3.25	4.50	3/4	12	2.00	1.75	0.83	1.750	1.75	8.00	5.50	3.50
4.00	5.00	3/4	12	2.00	1.75	0.83	1.750	1.75	8.50	5.75	3.75
5.00	6.50	3/4	12	2.00	1.75	1.11	1.750	1.75	10.00	6.25	4.25
6.00	7.50	1	16	2.25	2.25	1.25	2.000	2.00	11.50	7.38	4.88

[1]NPTF ports are available at no extra charge.
[2]SAE straight thread ports are standard and are indicated by port number.

Style DB – Dimensional and Mounting Data

Bore Ø	Rod No.	MM Rod Ø	WF	Y	Add Stroke	
					XJ	ZB Max.
1.50	1 (std.)	0.625	1.00	2.00	4.88	6.13
	2	1.000	1.38	2.38	5.25	6.50
2.00	1 (std.)	1.000	1.38	2.38	5.25	6.68
	2	1.375	1.63	2.63	5.50	6.92
2.50	1 (std.)	1.000	1.38	2.38	5.38	6.80
	2	1.750	1.88	2.88	5.88	7.30
	3	1.375	1.63	2.63	5.63	7.05
3.25	1 (std.)	1.375	1.63	2.75	6.25	7.96
	2	2.000	2.00	3.13	6.63	8.33
	3	1.750	1.88	3.00	6.50	8.21
4.00	1 (std.)	1.750	1.88	3.00	6.75	8.46
	2	2.500	2.25	3.38	7.13	8.83
	3	2.000	2.00	3.13	6.88	8.58
5.00	1 (std.)	2.000	2.00	3.13	7.38	9.36
	2	3.500	2.25	3.38	7.63	9.61
	3	2.500	2.25	3.38	7.63	9.61
	4	3.000	2.25	3.38	7.63	9.61
6.00	1 (std.)	2.500	2.25	3.50	8.38	10.88
	2	4.000	2.25	3.50	8.38	10.88
	3	3.000	2.25	3.50	8.38	10.88
	4	3.500	2.25	3.50	8.38	10.88

⚠**PROP 65 WARNING** **WARNING:** This product can expose you to chemicals including **Lead and Lead Compounds** which are known to the State of California to cause cancer and birth defects or other reproductive harm. For more information go to www.P65Warnings.ca.gov

Intermediate Fixed Trunnion Mounting

Style DD – 1.50" - 3.25" Bore
(NFPA Style MT4)

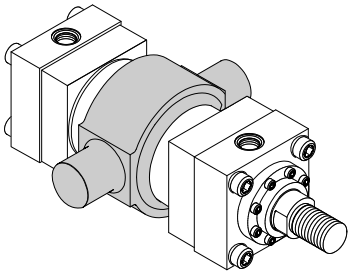

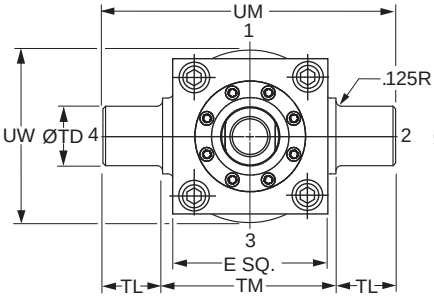

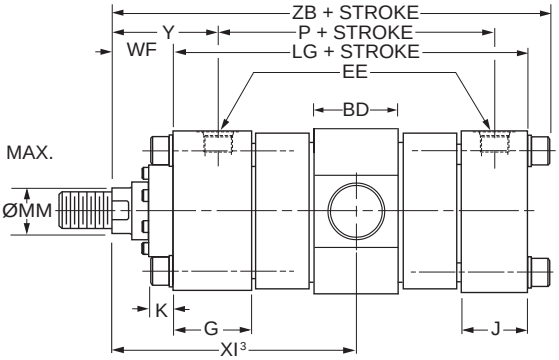

Style DD & Style DE – Dimensional and Mounting Data

Bore Ø	BD	E	EE		G	J	K Max.	TD Ø +.000 -.001	TL	TM	UM	UW	Add Stroke	
			NPTF[1]	SAE[2]									LG	P
1.50	1.31	2.50	1/2	10	1.75	1.50	0.50	1.000	1.00	3.00	5.00	3.00	4.63	2.88
2.00	1.69	3.00	1/2	10	1.75	1.50	0.67	1.375	1.38	3.50	6.25	3.50	4.63	2.88
2.50	1.69	3.50	1/2	10	1.75	1.50	0.67	1.375	1.38	4.00	6.75	4.00	4.75	3.00
3.25	2.19	4.50	3/4	12	2.00	1.75	0.83	1.750	1.75	5.00	8.50	5.00	5.50	3.50
4.00	2.44	5.00	3/4	12	2.00	1.75	0.83	2.000	1.75	5.50	9.00	6.00	5.75	3.75
5.00	2.88	6.50	3/4	12	2.00	1.75	1.11	2.500	1.75	7.00	10.50	7.38	6.25	4.25
6.00	3.38	7.50	1	16	2.25	2.25	1.25	3.000	2.00	8.50	12.50	9.00	7.38	4.88

[1]NPTF ports are available at no extra charge.
[2]SAE straight thread ports are standard and are indicated by port number.

Style DD & Style DE – Dimensional and Mounting Data

Bore Ø	Rod No.	MM Rod Ø	WF	Y	Minimum XI[3]		Min. Stroke	Add Stroke		
					Styles 4, 8 & 9	Style 55		Maximum XI[4]		ZB Max
								Styles 4, 8 & 9	Style 55	
1.50	1 (std.)	0.625	1.00	2.00	4.81	5.63	2.88	2.00	2.75	6.13
	2	1.000	1.38	2.38	5.25	6.25	2.88	2.44	3.38	6.50
2.00	1 (std.)	1.000	1.38	2.38	5.69	6.69	3.75	1.94	2.94	6.68
	2	1.375	1.63	2.63	5.94	7.06	3.75	2.19	3.31	6.92
2.50	1 (std.)	1.000	1.38	2.38	5.69	6.69	3.63	2.06	3.06	6.80
	2	1.750	1.88	2.88	6.19	7.44	3.63	2.56	3.81	7.30
	3	1.375	1.63	2.63	5.94	7.06	3.63	2.31	3.44	7.05
3.25	1 (std.)	1.375	1.63	2.75	6.69	7.81	4.38	2.31	3.44	7.96
	2	2.000	2.00	3.13	7.06	8.81	4.38	2.69	4.44	8.33
	3	1.750	1.88	3.00	6.94	8.19	4.38	2.56	3.81	8.21
4.00	1 (std.)	1.750	1.88	3.00	7.38	8.63	5.00	2.39	3.63	8.46
	2	2.500	2.25	3.38	7.75	10.00	5.00	2.75	5.00	8.83
	3	2.000	2.00	3.13	7.50	9.25	5.00	2.50	4.25	8.58
5.00	1 (std.)	2.000	2.00	3.13	7.94	9.69	5.44	2.56	4.31	9.36
	2	3.500	2.25	3.38	8.19	11.56	5.44	2.81	6.19	9.61
	3	2.500	2.25	3.38	8.19	10.44	5.44	2.81	5.00	9.61
	4	3.000	2.25	3.38	8.19	10.81	5.44	2.81	5.44	9.61
6.00	1 (std.)	2.500	2.25	3.50	9.25	11.50	6.69	2.63	4.88	10.88
	2	4.000	2.25	3.50	9.25	12.75	6.69	2.63	6.13	10.88
	3	3.000	2.25	3.50	9.25	11.88	6.69	2.63	5.25	10.88
	4	3.500	2.25	3.50	9.25	12.63	6.69	2.63	6.00	10.88

[3]Dimension XI to be specified by customer. Reference point for rod end Style 55 is end of piston rod.
[4]Dimensions shown are valid for standard WF and WG dimension.

Heavy Duty Intermediate Fixed Trunnion Mounting

Style DE – 4.00" - 6.00" Bore (NFPA Style MT4)

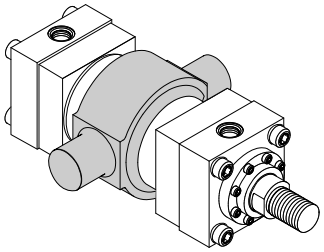

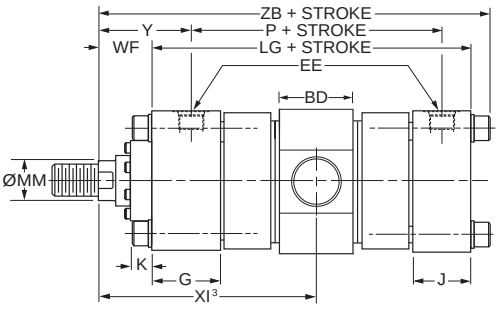

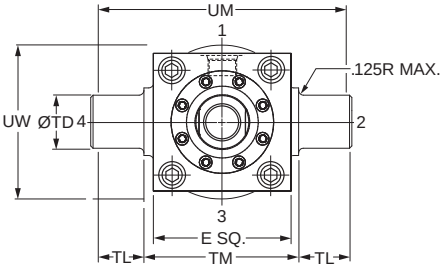

⚠PROP 65 WARNING **WARNING:** This product can expose you to chemicals including **Lead and Lead Compounds** which are known to the State of California to cause cancer and birth defects or other reproductive harm. For more information go to www.P65Warnings.ca.gov

Spherical Bearing Mounting
Style SB

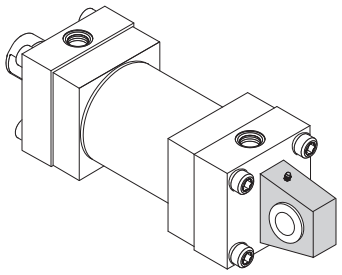

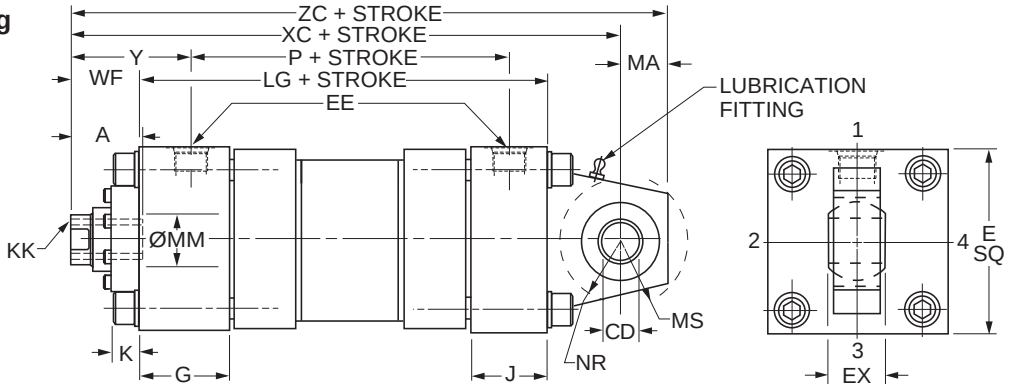

Style SB – Dimensional and Mounting Data

Bore Ø	A	CD[1] Ø +0.0000 -0.0005	E	EE		EX	G	J	K Max.	MA	MS	NR	Add Stroke		Maximum Operating psi[2]
				NPTF[1]	SAE[2]								LG	P	
1.50	0.75	0.5000	2.50	1/2	10	0.44	1.75	1.50	0.50	0.75	0.94	0.63	4.63	2.88	1500
2.00	1.13	0.7500	3.00	1/2	10	0.66	1.75	1.50	0.67	1.00	1.38	1.00	4.63	2.88	2200
2.50	1.13	0.7500	3.50	1/2	10	0.66	1.75	1.50	0.67	1.00	1.38	1.00	4.75	3.00	1450
3.25	1.63	1.0000	4.50	3/4	12	0.88	2.00	1.75	0.83	1.25	1.69	1.25	5.50	3.50	1500
4.00	2.00	1.3750	5.00	3/4	12	1.19	2.00	1.75	0.83	1.88	2.44	1.63	5.75	3.75	1850
5.00	2.25	1.7500	6.50	3/4	12	1.53	2.00	1.75	1.11	2.50	2.88	2.06	6.25	4.25	2000
6.00	3.00	2.0000	7.50	1	16	1.75	2.25	2.25	1.25	2.50	3.31	2.38	7.38	4.88	1800

[1] Diameter CD is hole diameter.
[2] Maximum operating pressure at 4:1 design factor is based on tensile strength of material. Pressure ratings are based on standard bearing ratings.

Style SB – Dimensional and Mounting Data

Bore Ø	Rod No.	MM Rod Ø	Thread		WF	Y	Add Stroke		
			Style 9 KK[3]	Style 7 KK[3]			XC	XL	ZC
1.50	1 (std.)	0.625	7/16-20	—	1.00	2.00	6.38	7.25	7.13
	2	1.000	—	7/16-20	1.38	2.38	6.75	7.63	7.50
2.00	1 (std.)	1.000	3/4-16	—	1.38	2.38	7.25	8.50	8.25
	2	1.375	—	3/4-16	1.63	2.63	7.50	8.75	8.50
2.50	1 (std.)	1.000	3/4-16	—	1.38	2.38	7.38	8.63	8.38
	2	1.750	—	3/4-16	1.88	2.88	7.88	9.13	8.88
	3	1.375	—	3/4-16	1.63	2.63	7.63	8.88	8.63
3.25	1 (std.)	1.375	1-14	—	1.63	2.75	8.63	10.50	9.88
	2	2.000	—	1-14	2.00	3.13	9.00	10.88	10.25
	3	1.750	—	1-14	1.88	3.00	8.88	10.75	10.13
4.00	1 (std.)	1.750	1 1/4-12	—	1.88	3.00	9.75	11.88	11.63
	2	2.500	—	1 1/4-12	2.25	3.38	10.13	12.25	12.00
	3	2.000	—	1 1/4-12	2.00	3.13	9.88	12.00	11.75
5.00	1 (std.)	2.000	1 1/2-12	—	2.00	3.13	10.50	13.00	13.00
	2	3.500	—	1 1/2-12	2.25	3.38	10.75	13.25	13.25
	3	2.500	—	1 1/2-12	2.25	3.38	10.75	13.25	13.25
	4	3.000	—	1 1/2-12	2.25	3.38	10.75	13.25	13.25
6.00	1 (std.)	2.500	1 7/8-12	—	2.25	3.50	12.13	14.88	14.63
	2	4.000	—	1 7/8-12	2.25	3.50	12.13	14.88	14.63
	3	3.000	—	1 7/8-12	2.25	3.50	12.13	14.88	14.63
	4	3.500	—	1 7/8-12	2.25	3.50	12.13	14.88	14.63

[3] Style 9 and Style 7 threads listed are for a spherical rod eye (sold separately) with pin diameter that matches the cap pin.

Style SB – Recommended maximum swivel angle on each side of the cylinder centerline.

Bore Ø	Head End Mounted		Cap End Mounted	
	Angle a	Tan. of a	Angle a	Tan. of a
1.50	2.00°	.035	2.00°	.035
2.00	2.50°	.044	4.50°	.079
2.50	2.50°	.044	4.50°	.079
3.25	3.00°	.052	3.00°	.052
4.00	2.50°	.044	3.00°	.052
5.00	3.00°	.052	3.00°	.052
6.00	3.00°	.052	3.00°	.052

Note: Dimension X is the maximum off center mounting of the cylinder. To determine dimension X for various stroke lengths multiply the distance between pivot pin holes by tangent of angle a. For extended position use X = XL + 2X stroke.

Mounting Information
Head End Mounting

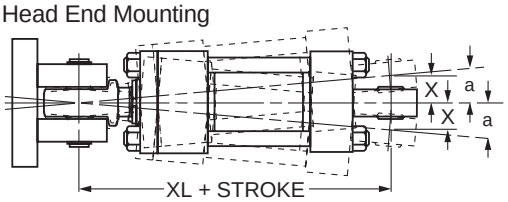

Cap End Mounting

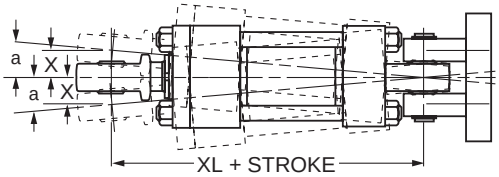

⚠PROP 65 WARNING **WARNING:** This product can expose you to chemicals including **Lead and Lead Compounds** which are known to the State of California to cause cancer and birth defects or other reproductive harm. For more information go to www.P65Warnings.ca.gov

Spherical Bearing Mounting
Style SE

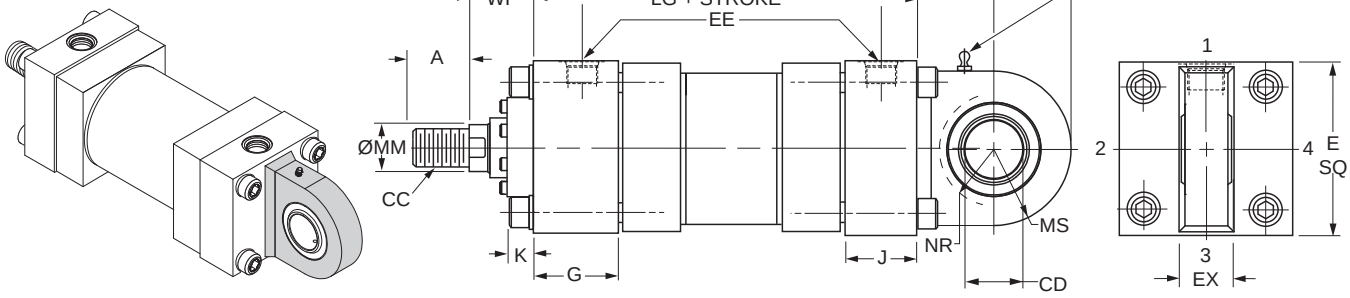

Style SE – Dimensional and Mounting Data

Bore Ø	A	CD[1] Ø	E	EE		EX	G	J	K Max.	MA	MS	NR	Add Stroke	
				NPTF	SAE								LG	P
1.50	0.75	0.7500$^{-0.0005}$	2.50	1/2	10	0.66	1.75	1.50	0.50	1.00	1.00	0.75	4.63	2.88
2.00	1.13	1.0000$^{-0.0005}$	3.00	1/2	10	0.88	1.75	1.50	0.67	1.25	1.25	1.00	4.63	2.88
2.50	1.13	1.2500$^{-0.0005}$	3.50	1/2	10	1.09	1.75	1.50	0.67	1.50	1.50	1.31	4.75	3.00
3.25	1.63	1.5000$^{-0.0005}$	4.50	3/4	12	1.31	2.00	1.75	0.83	2.00	2.00	1.75	5.50	3.50
4.00	2.00	2.0000$^{-0.0005}$	5.00	3/4	12	1.75	2.00	1.75	0.83	2.25	2.25	2.13	5.75	3.75
5.00	2.25	2.5000$^{-0.0006}$	6.50	3/4	12	2.19	2.00	1.75	1.11	3.00	3.00	2.75	6.25	4.25
6.00	3.00	3.0000$^{-0.0006}$	7.50	1	16	2.63	2.25	2.25	1.25	3.50	3.50	3.13	7.38	4.88

[1] Diameter CD is hole diameter. [2]Maximum operating pressure at 4:1 design factor is based on tensile strength of material. Pressure ratings are based on standard bearing ratings.

Style SE – Dimensional and Mounting Data

Bore Ø	Rod No.	MM Rod Ø	Thread Style 8 CC[3]	A	WF	Y	Add Stroke XC	XL	ZC
1.50	1 (std.)	0.625	1/2-20	0.75	1.00	2.00	6.88	9.01	7.88
	2	1.000	[3]	[3]	1.38	2.38	7.25	9.38	8.25
2.00	1 (std.)	1.000	7/8-14	1.13	1.38	2.38	7.56	10.56	8.81
	2	1.375	[3]	[3]	1.63	2.63	7.81	10.81	9.06
2.50	1 (std.)	1.000	7/8-14	1.13	1.38	2.38	7.75	10.75	9.25
	2	1.750	[3]	[3]	1.88	2.88	8.25	11.25	9.75
	3	1.375	[3]	[3]	1.63	2.63	8.00	11.00	9.50
3.25	1 (std.)	1.375	1 1/4-12	1.63	1.63	2.75	9.25	13.38	11.25
	2	2.000	[3]	[3]	2.00	3.13	9.63	13.75	11.63
	3	1.750	[3]	[3]	1.88	3.00	9.50	13.63	11.50
4.00	1 (std.)	1.750	1 1/2-12	2.00	1.88	3.00	10.13	15.13	12.38
	2	2.500	[3]	[3]	2.25	3.38	10.50	15.50	12.75
	3	2.000	[3]	[3]	2.00	3.13	10.25	15.25	12.50
5.00	1 (std.)	2.000	1 3/4-12	2.25	2.00	3.13	11.50	17.25	14.50
	2	3.500	[3]	[3]	2.25	3.38	11.75	17.50	14.75
	3	2.500	[3]	[3]	2.25	3.38	11.75	17.50	14.75
	4	3.000	[3]	[3]	2.25	3.38	11.75	17.50	14.75
6.00	1 (std.)	2.500	2 1/4-12	3.00	2.25	3.50	13.38	20.38	16.88
	2	4.000	[3]	[3]	2.25	3.50	13.38	20.38	16.88
	3	3.000	[3]	[3]	2.25	3.50	13.38	20.38	16.88
	4	3.500	[3]	[3]	2.25	3.50	13.38	20.38	16.88

Style SE – Recommended maximum swivel angle on each side of the cylinder centerline.

Bore Ø	Head End Mounted		Cap End Mounted	
	Angle a	Tan. of a	Angle a	Tan. of a
1.50	2.50°	0.044	3.00°	0.052
2.00	3.00°	0.052	3.00°	0.052
2.50	3.00°	0.052	3.00°	0.052
3.25	3.00°	0.052	2.75°	0.048
4.00	3.00°	0.052	3.00°	0.052
5.00	3.00°	0.052	3.00°	0.052
6.00	3.00°	0.052	3.00°	0.052

Note: Dimension X is the maximum off center mounting of the cylinder. To determine dimension X for various stroke lengths multiply the distance between pivot pin holes by tangent of angle a. For extended position use X = XL + 2X stroke.

Mounting Information

Head End Mounting

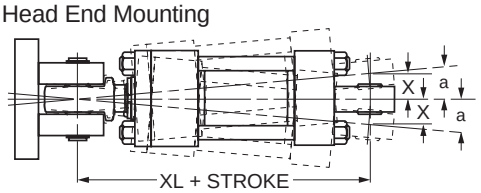

Cap End Mounting

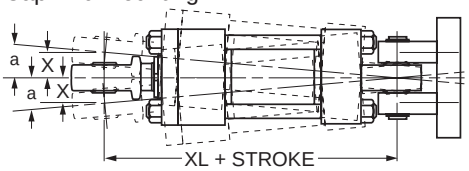

[3] To match pin diameter in rod eye and cap, when an oversize rod is required, specify rod end style '3', 'CC' thread and 'A' thread length for the standard rod diameter (Rod No. 1 for the bore), and 'WF' for the oversize rod. Order the rod eye and clevis bracket for the required bore size from the tables on the Style SE Spherical Bearing Accessories page.

⚠PROP 65 WARNING **WARNING:** This product can expose you to chemicals including **Lead and Lead Compounds** which are known to the State of California to cause cancer and birth defects or other reproductive harm. For more information go to www.P65Warnings.ca.gov

Double Rod Cylinder

Style K

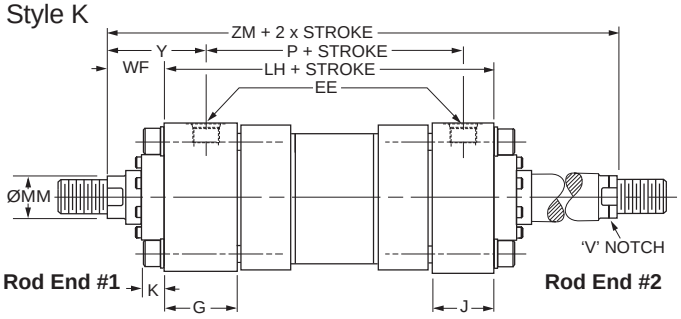

Double Rod End Mounting Styles

See Mounting Groups page in Section H for guidance on double rod end cylinder mounting style selection.

Mounting Styles for Single Rod Models	Mounting Styles for Corresponding Double Rod Models[1]		Dimensions Shown on This Page Supplement Dimensions on 1.50" - 6.00" Bore Pages Listed Below
	Load Connected To Rod On Cylinder Mounting End	Load Connected To Rod Opposite Cylinder Mounting End	
T	KT	KT	92
C	KC	KC	93
JJ	KJJ	KHH	94
D	KD	KDB	97
DD	KDD[2]	KDD[2]	99
DE	KDE[2]	KDE[2]	99

[1] Connect load to piston rod without 'V' notch. If only one end of the Double Rod Cylinder is to be cushioned, be sure to clearly specify which end this will be.

[2] Specify XI dimension for Styles DD & DE from #1 rod end (without 'V' notch).

How to Use Double Rod Cylinder Dimension Drawings

To determine dimensions for a double rod cylinder, first refer to the desired single rod mounting style cylinder shown on preceding pages of this catalog. (See table above.) After selecting necessary dimensions from that drawing, return to this page supplement the single rod dimensions with those shown on drawing at right and dimension table below. Note that double rod cylinders have a head (Dim. G) at both ends and that dimension LH replaces LG. The double rod dimensions differ from, or are in addition to those for single rod cylinders shown on preceding pages and provide the information needed to completely dimension a double rod cylinder.

On a double rod cylinder where the two rod ends are different, be sure to clearly state which rod end is to be assembled at which end. Port position 1 is standard. If other than standard, specify pos. 2, 3 or 4 when viewed from rod end #1 only. See port position information in Section H.

Bore Ø	Rod No.	MM Rod Ø	Add Stroke		Add 2X Stroke
			LH	SSK	ZM
1.50	1 (std.)	0.625	4.88	4.13	6.88
	2	1.000	4.88	4.13	7.63
2.00	1 (std.)	1.000	4.88	3.88	7.63
	2	1.375	4.88	3.88	8.13
2.50	1 (std.)	1.000	5.00	3.63	7.75
	2	1.750	5.00	3.63	8.75
	3	1.375	5.00	3.63	8.25
3.25	1 (std.)	1.375	5.75	4.38	9.00
	2	2.000	5.75	4.38	9.75
	3	1.750	5.75	4.38	9.50
4.00	1 (std.)	1.750	6.00	4.25	9.75
	2	2.500	6.00	4.25	10.50
	3	2.000	6.00	4.25	10.00
5.00	1 (std.)	2.000	6.50	4.75	10.50
	2	3.500	6.50	4.75	11.00
	3	2.500	6.50	4.75	11.00
	4	3.000	6.50	4.75	11.00
6.00	1 (std.)	2.500	7.38	5.13	11.88
	2	4.000	7.38	5.13	11.88
	3	3.000	7.38	5.13	11.88
	4	3.500	7.38	5.13	11.88
Replaces On single rod mounting styles:			**LG**	**SS**	–
			All Mtg. Styles	**C**	**All Mtg. Styles**

Series 2HB Rod Gland Retention[3]

B = Bolt -On Gland with Circular Retainer
R = Full Square Gland Retainer

Bore Ø	Rod No.	MM Rod Ø	Mounting Style	
			HH, C, D, DB, DD, DE, BB, SB, SE	JJ
1.50	1 (Std.)	0.625	B	B
	2	1.000	R	B
2.00	1 (Std.)	1.000	B	B
	2	1.375	R	B
2.50	1 (Std.)	1.000	B	B
	2	1.750	B	B
	3	1.375	B	B
3.25	All	All	B	B
4.00	All	All	B	B
5.00	All	All	B	B
6.00	All	All	B	B

[3] Gland retention style may vary when thrust key retainer or gland drain option is included. Contact factory for details.

⚠PROP 65 WARNING **WARNING:** This product can expose you to chemicals including **Lead and Lead Compounds** which are known to the State of California to cause cancer and birth defects or other reproductive harm. For more information go to www.P65Warnings.ca.gov

Rod End Dimensions

Thread Style 4 (NFPA Style SM)
Small Male

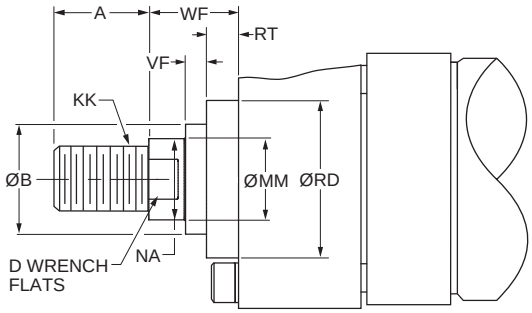

Thread Style 8 (NFPA Style IM)
Intermediate Male

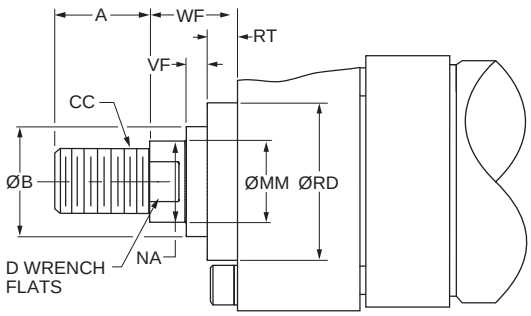

Thread Style 9[2] (NFPA Style SF)
Small Female

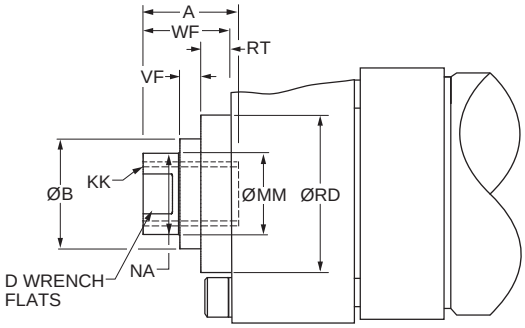

Thread Style 55[1]

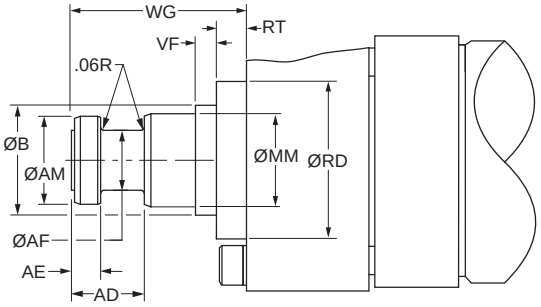

Rod End Dimensions

Bore Ø	Rod No.	MM Rod Ø	Thread		Rod Extensions and Pilot Dimensions							
			Style 8 CC	Style 4 & 9 KK	A	B Ø +.000 -.002	D	NA	VF	RD Ø	RT	WF
7.00	1 (std.)	3.000	2 3/4-12	2 1/4-12	3.50	3.749	2.63	2.88	0.40	5.26	0.85	2.25
	2	5.000	4 3/4-12	3 1/2-12	5.00	5.749	-[3]	4.88	0.34	7.25	0.91	2.25
	3	3.500	3 1/4-12	2 1/2-12	3.50	4.249	3.00	3.38	0.34	5.76	0.91	2.25
	4	4.000	3 3/4-12	3-12	4.00	4.749	3.38	3.88	0.34	6.31	0.91	2.25
	5	4.500	4 1/4-12	3 1/4-12	4.50	5.249	-[3]	4.38	0.34	6.94	0.91	2.25
8.00	1 (std.)	3.500	3 1/4-12	2 1/2-12	3.50	4.249	3.00	3.38	0.34	5.76	0.91	2.25
	2	5.500	5 1/4-12	4-12	5.50	6.249	-[3]	5.38	0.34	7.94	0.91	2.25
	3	4.000	3 3/4-12	3-12	4.00	4.749	3.38	3.88	0.34	6.31	0.91	2.25
	4	4.500	4 1/4-12	3 1/4-12	4.50	5.249	-[3]	4.38	0.34	6.94	0.91	2.25
	5	5.000	4 3/4-12	3 1/2-12	5.00	5.749	-[3]	4.88	0.34	7.25	0.91	2.25

"Special" Thread Style 3

Special thread, extension, rod eye, blank, etc., are also available.

To order, specify "Style 3" and give desired dimensions for KK, A, W or WF. If otherwise special, furnish dimensioned sketch.

[1] For special WG dimension, specify "Style 3" and give desired dimension for WG. For other changes, place "S" in the model code, and describe rod end with dimensioned sketch.

[2] Style 9 stroke restrictions may apply. See Style 9 Minimum Stroke Table on How to Order page for details.

[3] These piston rod numbers will have 4 spanner wrench holes instead of wrench flats. See rod drawings on 3H Large Bore Piston Rod Ends page for dimensions.

Style 55 Rod End

MM Rod Ø	AD	AE +.001 -.001	AF Ø	AM Ø	WG[1]
3.000	2.44	0.874	2.25	2.95	4.88
3.500	2.69	0.999	2.50	3.45	5.63
4.000	2.69	0.999	3.00	3.95	5.75
4.500	3.19	1.499	3.50	4.45	6.50
5.000	3.19	1.499	3.88	4.95	6.63
5.500	3.94	1.874	4.38	5.45	7.50

⚠PROP 65 WARNING **WARNING:** This product can expose you to chemicals including **Lead and Lead Compounds** which are known to the State of California to cause cancer and birth defects or other reproductive harm. For more information go to www.P65Warnings.ca.gov

Basic Mounting
Style T
(NFPA Style MX0)

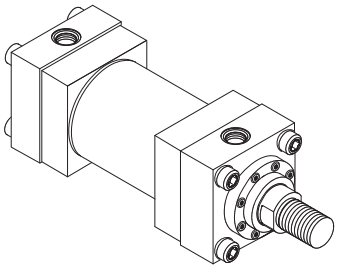

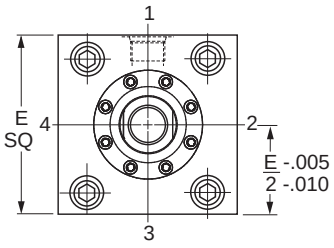

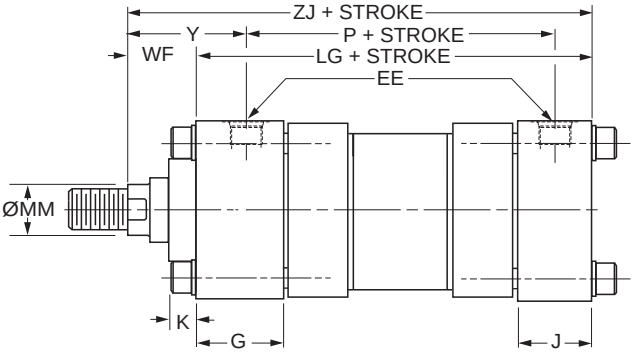

Note: 8.00" bore threaded flanges extend beyond head and cap E square.
See 8.00" Bore Threaded Flange page for details.

Style T – Dimensional and Mounting Data

Bore Ø	Rod No.	MM Rod Ø	E	EE		G	J	K Max.	WF	Y	Add Stroke		
				NPTF[1]	SAE[2]						LG	P	ZJ
7.00	1 (std.)	3.000	8.50	1 1/4	20	2.75	2.75	1.44	2.25	3.69	8.50	5.63	10.75
	2	5.000	8.50	1 1/4	20	2.75	2.75	1.44	2.25	3.69	8.50	5.63	10.75
	3	3.500	8.50	1 1/4	20	2.75	2.75	1.44	2.25	3.69	8.50	5.63	10.75
	4	4.000	8.50	1 1/4	20	2.75	2.75	1.44	2.25	3.69	8.50	5.63	10.75
	5	4.500	8.50	1 1/4	20	2.75	2.75	1.44	2.25	3.69	8.50	5.63	10.75
8.00	1 (std.)	3.500	9.50	1 1/2	24	3.00	3.00	1.56	2.25	3.81	9.50	6.38	11.75
	2	5.500	9.50	1 1/2	24	3.00	3.00	1.56	2.25	3.81	9.50	6.38	11.75
	3	4.000	9.50	1 1/2	24	3.00	3.00	1.56	2.25	3.81	9.50	6.38	11.75
	4	4.500	9.50	1 1/2	24	3.00	3.00	1.56	2.25	3.81	9.50	6.38	11.75
	5	5.000	9.50	1 1/2	24	3.00	3.00	1.56	2.25	3.81	9.50	6.38	11.75

[1]NPTF ports are available at no extra charge. [2]SAE straight thread ports are standard and are indicated by port number.

Side Lug Mounting
Style C
(NFPA Style MS2)

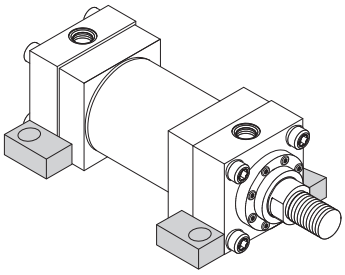

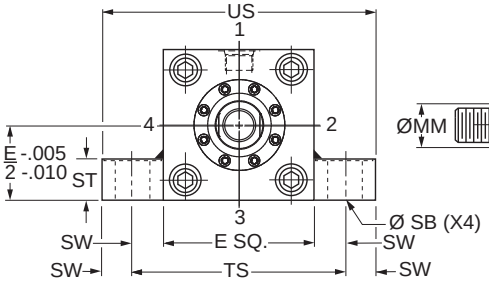

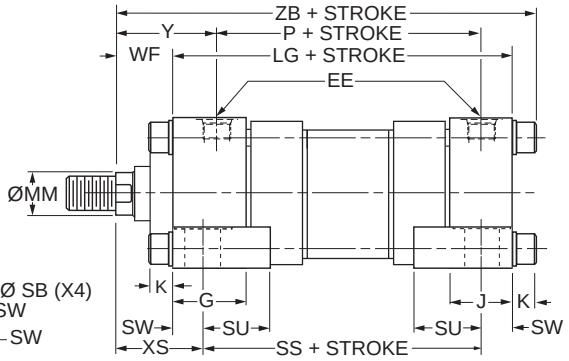

Note: 8.00" bore threaded flanges extend beyond head and cap E square.
See 8.00" Bore Threaded Flange page for details.

Style C – Dimensional and Mounting Data

Bore Ø	Rod No.	MM Rod Ø	E	EE		G	J	K Max.	SB Ø	ST	SU	SW	TS	US	WF	XS	Y	Add Stroke			
				NPTF[1]	SAE[2]													LG	P	SS	ZB Max.
7.00	1 (std.)	3.000	8.50	1 1/4	20	2.75	2.75	1.44	1.56	1.75	2.88	1.38	11.25	14.00	2.25	3.63	3.69	8.50	5.63	5.75	12.19
	2	5.000	8.50	1 1/4	20	2.75	2.75	1.44	1.56	1.75	2.88	1.38	11.25	14.00	2.25	3.63	3.69	8.50	5.63	5.75	12.19
	3	3.500	8.50	1 1/4	20	2.75	2.75	1.44	1.56	1.75	2.88	1.38	11.25	14.00	2.25	3.63	3.69	8.50	5.63	5.75	12.19
	4	4.000	8.50	1 1/4	20	2.75	2.75	1.44	1.56	1.75	2.88	1.38	11.25	14.00	2.25	3.63	3.69	8.50	5.63	5.75	12.19
	5	4.500	8.50	1 1/4	20	2.75	2.75	1.44	1.56	1.75	2.88	1.38	11.25	14.00	2.25	3.63	3.69	8.50	5.63	5.75	12.19
8.00	1 (std.)	3.500	9.50	1 1/2	24	3.00	3.00	1.56	1.56	1.75	2.88	1.38	12.25	15.00	2.25	3.63	3.81	9.50	6.38	6.75	13.31
	2	5.500	9.50	1 1/2	24	3.00	3.00	1.56	1.56	1.75	2.88	1.38	12.25	15.00	2.25	3.63	3.81	9.50	6.38	6.75	13.31
	3	4.000	9.50	1 1/2	24	3.00	3.00	1.56	1.56	1.75	2.88	1.38	12.25	15.00	2.25	3.63	3.81	9.50	6.38	6.75	13.31
	4	4.500	9.50	1 1/2	24	3.00	3.00	1.56	1.56	1.75	2.88	1.38	12.25	15.00	2.25	3.63	3.81	9.50	6.38	6.75	13.31
	5	5.000	9.50	1 1/2	24	3.00	3.00	1.56	1.56	1.75	2.88	1.38	12.25	15.00	2.25	3.63	3.81	9.50	6.38	6.75	13.31

[1]NPTF ports are available at no extra charge. [2]SAE straight thread ports are standard and are indicated by port number.

⚠PROP 65 WARNING **WARNING:** This product can expose you to chemicals including **Lead and Lead Compounds** which are known to the State of California to cause cancer and birth defects or other reproductive harm. For more information go to www.P65Warnings.ca.gov

Head Rectangular Mounting
Style JJ
(NFPA Style ME5)

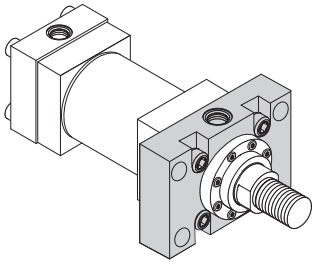

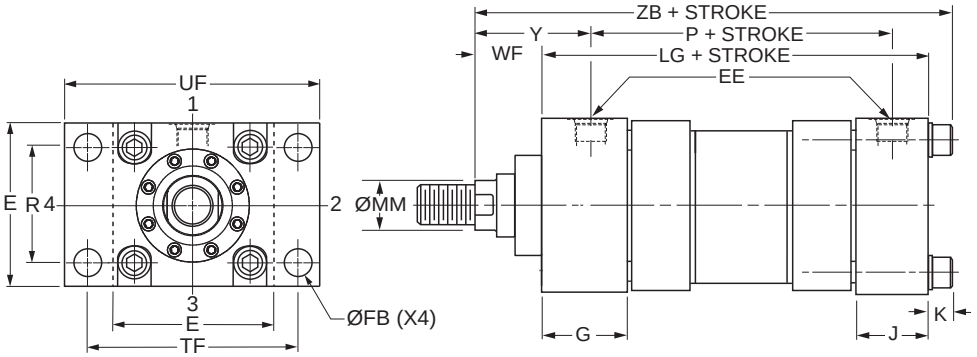

Style JJ – Dimensional and Mounting Data

Note: 8.00" bore threaded flanges extend beyond head and cap E square. See 8.00" Bore Threaded Flange page for details.

Bore Ø	Rod No.	MM Rod Ø	E	EE		FB Ø	G	J	K Max.	R	TF	UF	WF	Y	Add Stroke		
				NPTF[1]	SAE[2]										LG	P	ZB Max.
7.00	1 (std.)	3.000	8.50	1 1/4	20	1.19	2.75	2.75	1.44	6.58	10.63	12.63	2.25	3.69	8.50	5.63	12.19
	2	5.000	8.50	1 1/4	20	1.19	2.75	2.75	1.44	6.58	10.63	12.63	2.25	3.69	8.50	5.63	12.19
	3	3.500	8.50	1 1/4	20	1.19	2.75	2.75	1.44	6.58	10.63	12.63	2.25	3.69	8.50	5.63	12.19
	4	4.000	8.50	1 1/4	20	1.19	2.75	2.75	1.44	6.58	10.63	12.63	2.25	3.69	8.50	5.63	12.19
	5	4.500	8.50	1 1/4	20	1.19	2.75	2.75	1.44	6.58	10.63	12.63	2.25	3.69	8.50	5.63	12.19
8.00	1 (std.)	3.500	9.50	1 1/2	24	1.31	3.00	3.00	1.56	7.50	11.81	14.00	2.25	3.81	9.50	6.38	13.31
	2	5.500	9.50	1 1/2	24	1.31	3.00	3.00	1.56	7.50	11.81	14.00	2.25	3.81	9.50	6.38	13.31
	3	4.000	9.50	1 1/2	24	1.31	3.00	3.00	1.56	7.50	11.81	14.00	2.25	3.81	9.50	6.38	13.31
	4	4.500	9.50	1 1/2	24	1.31	3.00	3.00	1.56	7.50	11.81	14.00	2.25	3.81	9.50	6.38	13.31
	5	5.000	9.50	1 1/2	24	1.31	3.00	3.00	1.56	7.50	11.81	14.00	2.25	3.81	9.50	6.38	13.31

[1]NPTF ports are available at no extra charge. [2]SAE straight thread ports are standard and are indicated by port number.

Cap Rectangular Mounting
Style HH
(NFPA Style ME6)

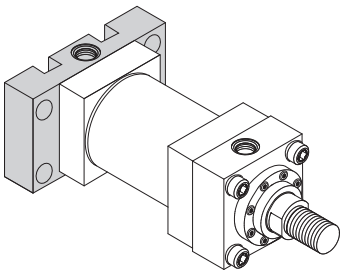

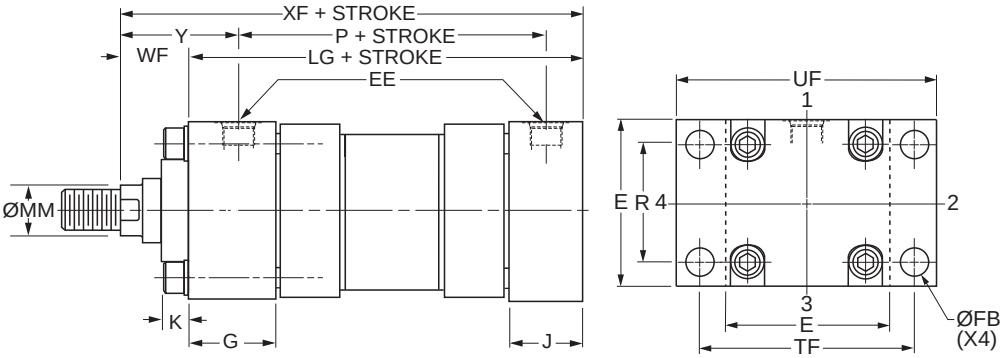

Style HH – Dimensional and Mounting Data

Note: 8.00" bore threaded flanges extend beyond head and cap E square. See 8.00" Bore Threaded Flange page for details.

Bore Ø	Rod No	MM Rod Ø	E	EE		FB Ø	G	J	K Max.	R	TF	UF	WF	Y	Add Stroke		
				NPTF[1]	SAE[2]										LG	P	XF
7.00	1 (std.)	3.000	8.50	1 1/4	20	1.19	2.75	2.75	1.44	6.58	10.63	12.63	2.25	3.69	8.50	5.63	10.75
	2	5.000	8.50	1 1/4	20	1.19	2.75	2.75	1.44	6.58	10.63	12.63	2.25	3.69	8.50	5.63	10.75
	3	3.500	8.50	1 1/4	20	1.19	2.75	2.75	1.44	6.58	10.63	12.63	2.25	3.69	8.50	5.63	10.75
	4	4.000	8.50	1 1/4	20	1.19	2.75	2.75	1.44	6.58	10.63	12.63	2.25	3.69	8.50	5.63	10.75
	5	4.500	8.50	1 1/4	20	1.19	2.75	2.75	1.44	6.58	10.63	12.63	2.25	3.69	8.50	5.63	10.75
8.00	1 (std.)	3.500	9.50	1 1/2	24	1.31	3.00	3.00	1.56	7.50	11.81	14.00	2.25	3.81	9.50	6.38	11.75
	2	5.500	9.50	1 1/2	24	1.31	3.00	3.00	1.56	7.50	11.81	14.00	2.25	3.81	9.50	6.38	11.75
	3	4.000	9.50	1 1/2	24	1.31	3.00	3.00	1.56	7.50	11.81	14.00	2.25	3.81	9.50	6.38	11.75
	4	4.500	9.50	1 1/2	24	1.31	3.00	3.00	1.56	7.50	11.81	14.00	2.25	3.81	9.50	6.38	11.75
	5	5.000	9.50	1 1/2	24	1.31	3.00	3.00	1.56	7.50	11.81	14.00	2.25	3.81	9.50	6.38	11.75

[1]NPTF ports are available at no extra charge. [2]SAE straight thread ports are standard and are indicated by port number.

⚠PROP 65 WARNING **WARNING:** This product can expose you to chemicals including **Lead and Lead Compounds** which are known to the State of California to cause cancer and birth defects or other reproductive harm. For more information go to www.P65Warnings.ca.gov

Cap Fixed Clevis Mounting
Style BB
(NFPA Style MP1)

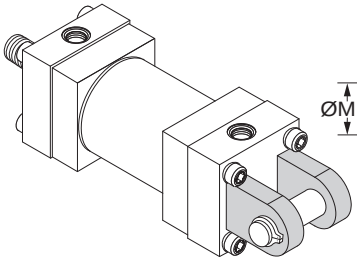

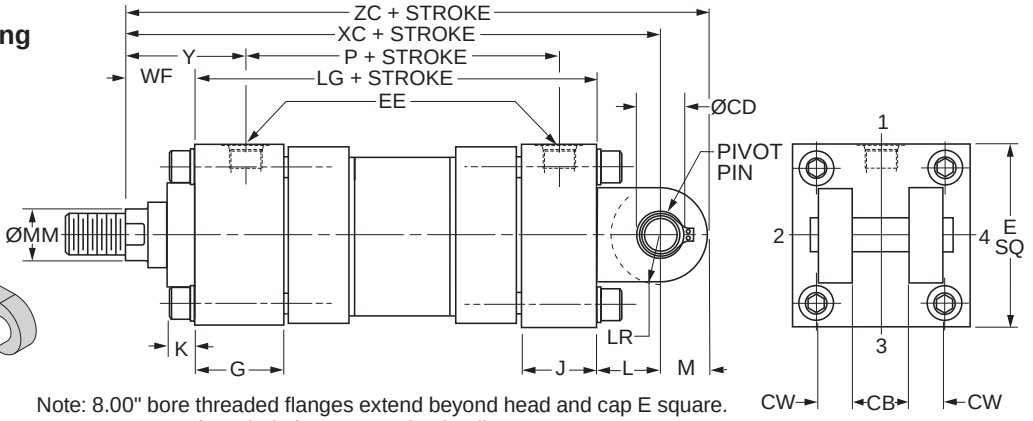

Note: 8.00" bore threaded flanges extend beyond head and cap E square.
See 8.00" Bore Threaded Flange page for details.

Style BB – Dimensional and Mounting Data

Bore Ø	Rod No.	MM Rod Ø	CB	CD[3] Ø +.000 -.002	CW	E	EE		G	J	K Max.	L	LR	M	WF	Y
							NPTF[1]	SAE[2]								
7.00	1 (std.)	3.000	3.00	2.501	1.50	8.50	1 1/4	20	2.75	2.75	1.44	3.00	2.75	2.50	2.25	3.69
	2	5.000	3.00	2.501	1.50	8.50	1 1/4	20	2.75	2.75	1.44	3.00	2.75	2.50	2.25	3.69
	3	3.500	3.00	2.501	1.50	8.50	1 1/4	20	2.75	2.75	1.44	3.00	2.75	2.50	2.25	3.69
	4	4.000	3.00	2.501	1.50	8.50	1 1/4	20	2.75	2.75	1.44	3.00	2.75	2.50	2.25	3.69
	5	4.500	3.00	2.501	1.50	8.50	1 1/4	20	2.75	2.75	1.44	3.00	2.75	2.50	2.25	3.69
8.00	1 (std.)	3.500	3.00	3.001	1.50	9.50	1 1/2	24	3.00	3.00	1.56	3.25	3.25	2.75	2.25	3.81
	2	5.500	3.00	3.001	1.50	9.50	1 1/2	24	3.00	3.00	1.56	3.25	3.25	2.75	2.25	3.81
	3	4.000	3.00	3.001	1.50	9.50	1 1/2	24	3.00	3.00	1.56	3.25	3.25	2.75	2.25	3.81
	4	4.500	3.00	3.001	1.50	9.50	1 1/2	24	3.00	3.00	1.56	3.25	3.25	2.75	2.25	3.81
	5	5.000	3.00	3.001	1.50	9.50	1 1/2	24	3.00	3.00	1.56	3.25	3.25	2.75	2.25	3.81

[1]NPTF ports are available at no extra charge.
[2]SAE straight thread ports are standard and are indicated by port number.
[3]Diameter CD is pin diameter.

Style BB – Dimensional and Mounting Data

Bore Ø	Rod No.	MM Rod Ø	Add Stroke			
			LG	P	XC	ZC
7.00	1 (std.)	3.000	8.50	5.63	13.75	16.25
	2	5.000	8.50	5.63	13.75	16.25
	3	3.500	8.50	5.63	13.75	16.25
	4	4.000	8.50	5.63	13.75	16.25
	5	4.500	8.50	5.63	13.75	16.25
8.00	1 (std.)	3.500	9.50	6.38	15.00	17.75
	2	5.500	9.50	6.38	15.00	17.75
	3	4.000	9.50	6.38	15.00	17.75
	4	4.500	9.50	6.38	15.00	17.75
	5	5.000	9.50	6.38	15.00	17.75

⚠**PROP 65 WARNING** **WARNING:** This product can expose you to chemicals including **Lead and Lead Compounds** which are known to the State of California to cause cancer and birth defects or other reproductive harm. For more information go to www.P65Warnings.ca.gov

Head Trunnion Mounting
Style D
(NFPA Style MT1)

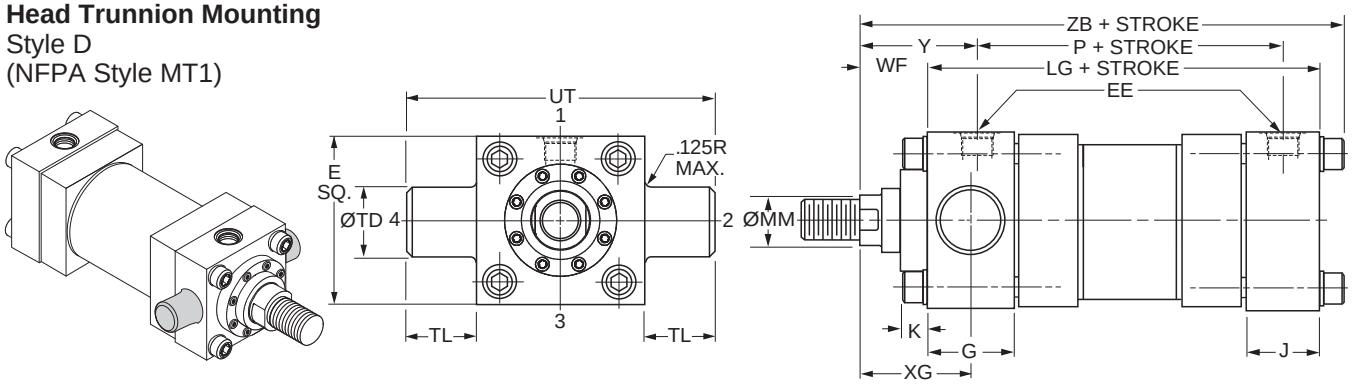

Style D – Dimensional and Mounting Data

Bore Ø	Rod No.	MM Rod Ø	E	EE		G	J	K Max.	TD Ø +.000 -.002	TL	UT	WF	Y	XG
				NPTF[1]	SAE[2]									
7.00	1 (std.)	3.000	8.50	1 1/4	20	2.75	2.75	1.44	2.500	2.50	13.50	2.25	3.69	3.63
	2	5.000	8.50	1 1/4	20	2.75	2.75	1.44	2.500	2.50	13.50	2.25	3.69	3.63
	3	3.500	8.50	1 1/4	20	2.75	2.75	1.44	2.500	2.50	13.50	2.25	3.69	3.63
	4	4.000	8.50	1 1/4	20	2.75	2.75	1.44	2.500	2.50	13.50	2.25	3.69	3.63
	5	4.500	8.50	1 1/4	20	2.75	2.75	1.44	2.500	2.50	13.50	2.25	3.69	3.63

[1]NPTF ports are available at no extra charge.
[2]SAE straight thread ports are standard and are indicated by port number.

Style D – Dimensional and Mounting Data

Bore Ø	Rod No.	MM Rod Ø	Add Stroke		
			LG	P	ZB Max.
7.00	1 (std.)	3.000	8.50	5.63	12.19
	2	5.000	8.50	5.63	12.19
	3	3.500	8.50	5.63	12.19
	4	4.000	8.50	5.63	12.19
	5	4.500	8.50	5.63	12.19

⚠**PROP 65 WARNING** **WARNING:** This product can expose you to chemicals including **Lead and Lead Compounds** which are known to the State of California to cause cancer and birth defects or other reproductive harm. For more information go to www.P65Warnings.ca.gov

Cap Trunnion Mounting
Style DB
(NFPA Style MT2)

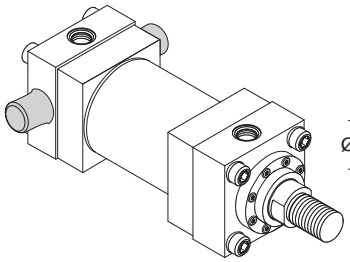

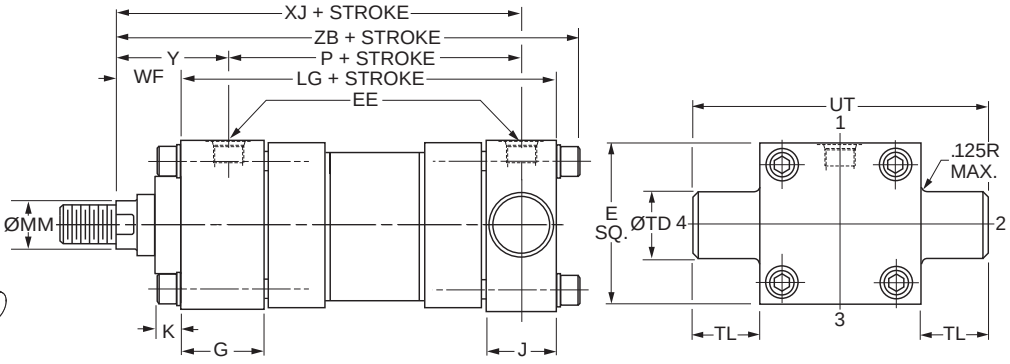

Style DB – Dimensional and Mounting Data

Bore Ø	Rod No.	MM Rod Ø	E	EE		G	J	K Max.	TD Ø +.000 -.002	TL	UT	WF	Y
				NPTF[1]	SAE[2]								
7.00	1 (std.)	3.000	8.50	1 1/4	20	2.75	2.75	1.44	2.500	2.50	13.50	2.25	3.69
	2	5.000	8.50	1 1/4	20	2.75	2.75	1.44	2.500	2.50	13.50	2.25	3.69
	3	3.500	8.50	1 1/4	20	2.75	2.75	1.44	2.500	2.50	13.50	2.25	3.69
	4	4.000	8.50	1 1/4	20	2.75	2.75	1.44	2.500	2.50	13.50	2.25	3.69
	5	4.500	8.50	1 1/4	20	2.75	2.75	1.44	2.500	2.50	13.50	2.25	3.69

[1]NPTF ports are available at no extra charge.
[2]SAE straight thread ports are standard and are indicated by port number.

Style DB – Dimensional and Mounting Data

Bore Ø	Rod No.	MM Rod Ø	Add Stroke			
			LG	P	XJ	ZB Max
7.00	1 (std.)	3.000	8.50	5.63	9.38	12.19
	2	5.000	8.50	5.63	9.38	12.19
	3	3.500	8.50	5.63	9.38	12.19
	4	4.000	8.50	5.63	9.38	12.19
	5	4.500	8.50	5.63	9.38	12.19

⚠**PROP 65 WARNING** **WARNING:** This product can expose you to chemicals including **Lead and Lead Compounds** which are known to the State of California to cause cancer and birth defects or other reproductive harm. For more information go to www.P65Warnings.ca.gov

Heavy Duty Intermediate Fixed Trunnion Mounting
Style DE
(NFPA Current Standard Style MT4)

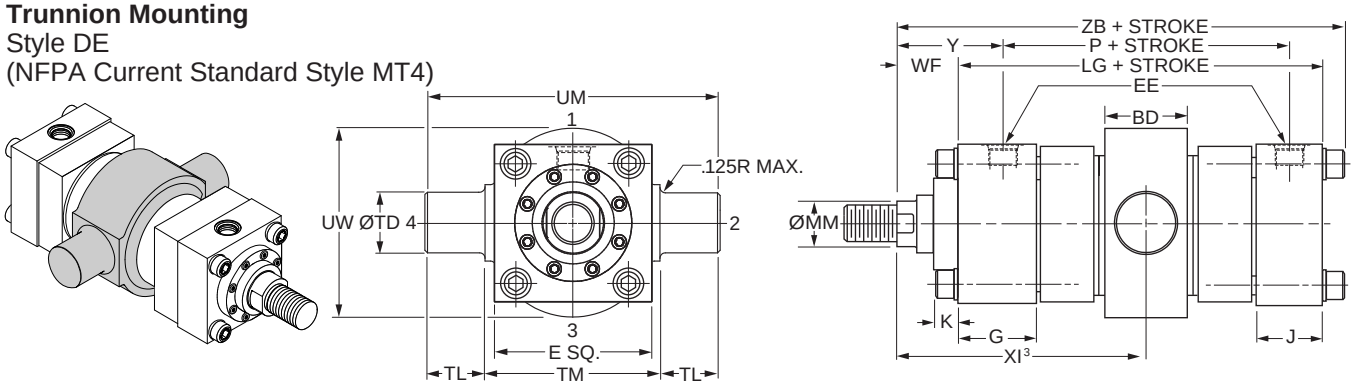

Note: 8.00" bore threaded flanges extend beyond head and cap E square. See 8.00" Bore Threaded Flange page for details.

Style DE – Dimensional and Mounting Data

Bore Ø	Rod No.	MM Rod Ø	BD	E	EE		G	J	K Max.	TD Ø +.000 -.002	TL	TM	UM	UW	WF	Y
					NPTF[1]	SAE[2]										
7.00	1 (std.)	3.000	3.88	8.50	1 1/4	20	2.75	2.75	1.44	3.500	2.50	9.75	14.75	10.25	2.25	3.69
	2	5.000	3.88	8.50	1 1/4	20	2.75	2.75	1.44	3.500	2.50	9.75	14.75	10.25	2.25	3.69
	3	3.500	3.88	8.50	1 1/4	20	2.75	2.75	1.44	3.500	2.50	9.75	14.75	10.25	2.25	3.69
	4	4.000	3.88	8.50	1 1/4	20	2.75	2.75	1.44	3.500	2.50	9.75	14.75	10.25	2.25	3.69
	5	4.500	3.88	8.50	1 1/4	20	2.75	2.75	1.44	3.500	2.50	9.75	14.75	10.25	2.25	3.69
8.00	1 (std.)	3.500	4.44	9.50	1 1/2	24	3.00	3.00	1.56	4.000	3.00	11.00	17.00	11.75	2.25	3.81
	2	5.500	4.44	9.50	1 1/2	24	3.00	3.00	1.56	4.000	3.00	11.00	17.00	11.75	2.25	3.81
	3	4.000	4.44	9.50	1 1/2	24	3.00	3.00	1.56	4.000	3.00	11.00	17.00	11.75	2.25	3.81
	4	4.500	4.44	9.50	1 1/2	24	3.00	3.00	1.56	4.000	3.00	11.00	17.00	11.75	2.25	3.81
	5	5.000	4.44	9.50	1 1/2	24	3.00	3.00	1.56	4.000	3.00	11.00	17.00	11.75	2.25	3.81

[1]NPTF ports are available at no extra charge.
[2]SAE straight thread ports are standard and are indicated by port number.

Style DE – Dimensional and Mounting Data

Bore Ø	Rod No.	MM Rod Ø	Style DE Minimum Stroke	Minimum XI[3]		Add Stroke				
				Styles 4, 8 & 9	Style 55	LG	P	Maximum XI[4]		ZB Max.
								Styles 4, 8 & 9	Style 55	
7.00	1 (std.)	3.000	8.06	10.50	13.13	8.50	5.63	2.50	5.13	12.19
	2	5.000	8.06	10.50	14.88	8.50	5.63	2.50	6.88	12.19
	3	3.500	8.06	10.50	13.88	8.50	5.63	2.50	5.87	12.19
	4	4.000	8.06	10.50	14.00	8.50	5.63	2.50	6.00	12.19
	5	4.500	8.06	10.50	14.75	8.50	5.63	2.50	6.75	12.19
8.00	1 (std.)	3.500	8.25	11.13	14.50	9.50	6.38	2.88	6.25	13.31
	2	5.500	8.25	11.13	16.38	9.50	6.38	2.88	8.13	13.31
	3	4.000	8.25	11.13	14.63	9.50	6.38	2.88	6.39	13.31
	4	4.500	8.25	11.13	15.38	9.50	6.38	2.88	7.13	13.31
	5	5.000	8.25	11.13	15.50	9.50	6.38	2.88	7.25	13.31

[3]Dimension XI to be specified by customer. Reference point for rod end Style 55 is end of piston rod.
[4]Dimensions shown are valid for standard WF and WG dimension.

⚠**PROP 65 WARNING** **WARNING:** This product can expose you to chemicals including **Lead and Lead Compounds** which are known to the State of California to cause cancer and birth defects or other reproductive harm. For more information go to www.P65Warnings.ca.gov

Spherical Bearing Mounting
Style SE

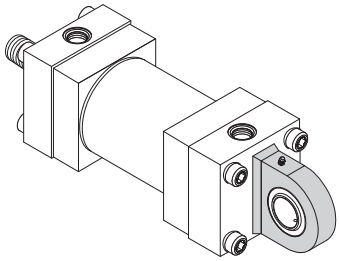

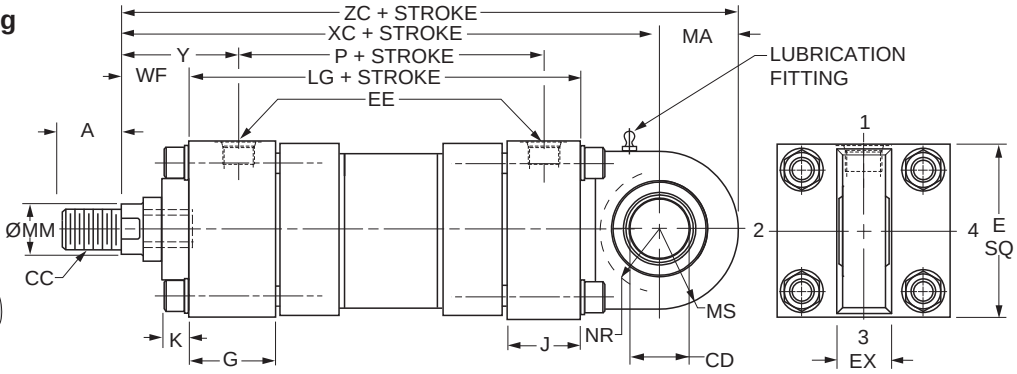

Note: 8.00" bore threaded flanges extend beyond head and cap E square. See 8.00" Bore Threaded Flange page for details.

Style SE – Dimensional and Mounting Data

Bore Ø	Rod No.	MM Rod Ø	A	CD[3] Ø +0.0000 -0.0008	E	EX	EE		G	J	K Max.	MS	MA	NR	WF	Y
							NPTF[1]	SAE[2]								
7.00	1 (std.)	3.000	3.500	3.5000	8.50	3.06	1 1/4	20	2.75	2.75	1.44	4.00	4.00	3.68	2.25	3.69
	2	5.000	3.500	3.5000	8.50	3.06	1 1/4	20	2.75	2.75	1.44	4.00	4.00	3.68	2.25	3.69
	3	3.500	3.500	3.5000	8.50	3.06	1 1/4	20	2.75	2.75	1.44	4.00	4.00	3.68	2.25	3.69
	4	4.000	3.500	3.5000	8.50	3.06	1 1/4	20	2.75	2.75	1.44	4.00	4.00	3.68	2.25	3.69
	5	4.500	3.500	3.5000	8.50	3.06	1 1/4	20	2.75	2.75	1.44	4.00	4.00	3.68	2.25	3.69
8.00	1 (std.)	3.500	3.500	4.0000	9.50	3.50	1 1/2	24	3.00	3.00	1.56	4.50	4.50	4.13	2.25	3.81
	2	5.500	3.500	4.0000	9.50	3.50	1 1/2	24	3.00	3.00	1.56	4.50	4.50	4.13	2.25	3.81
	3	4.000	3.500	4.0000	9.50	3.50	1 1/2	24	3.00	3.00	1.56	4.50	4.50	4.13	2.25	3.81
	4	4.500	3.500	4.0000	9.50	3.50	1 1/2	24	3.00	3.00	1.56	4.50	4.50	4.13	2.25	3.81
	5	5.000	3.500	4.0000	9.50	3.50	1 1/2	24	3.00	3.00	1.56	4.50	4.50	4.13	2.25	3.81

[1]NPTF ports are available at no extra charge.
[2]SAE straight thread ports are standard and are indicated by port number.
[3]Dimension CD is pin diameter.

Style SE – Dimensional and Mounting Data

Bore Ø	Rod No.	MM Rod Ø	Thread Style 8 CC[4]	A	Add Stroke				
					LG	P	XC	XL	ZC
7.00	1 (std.)	3.000	2 3/4-12	3.50	8.50	5.63	15.25	23.25	19.25
	2	5.000	[4]	[4]	8.50	5.63	15.25	23.25	19.25
	3	3.500	[4]	[4]	8.50	5.63	15.25	23.25	19.25
	4	4.000	[4]	[4]	8.50	5.63	15.25	23.25	19.25
	5	4.500	[4]	[4]	8.50	5.63	15.25	23.25	19.25
8.00	1 (std.)	3.500	3 1/4-12	3.50	9.50	6.38	16.75	25.25	21.25
	2	5.500	[4]	[4]	9.50	6.38	16.75	25.25	21.25
	3	4.000	[4]	[4]	9.50	6.38	16.75	25.25	21.25
	4	4.500	[4]	[4]	9.50	6.38	16.75	25.25	21.25
	5	5.000	[4]	[4]	9.50	6.38	16.75	25.25	21.25

[4] To match pin diameter in rod eye and cap, when an oversize rod is required, specify rod end style '3', 'CC' thread and 'A' thread length for the standard rod diameter (Rod No. 1 for the bore), and 'WF' for the oversize rod. Order the rod eye and clevis bracket for the required bore size from the tables on the Style SE Spherical Bearing Accessories page.

Style SE – Recommended maximum swivel angle on each side of the cylinder centerline.

Bore Ø	Head End Mounted		Cap End Mounted	
	Angle a	Tan. of a	Angle a	Tan. of a
7.00	3.00°	0.052	3.00°	0.052
8.00	3.00°	0.052	3.00°	0.052

Note: Dimension X is the maximum off center mounting of the cylinder. To determine dimension X for various stroke lengths multiply the distance between pivot pin holes by tangent of angle a. For extended position use X = XL + 2X stroke.

Mounting Information
Head End Mounting

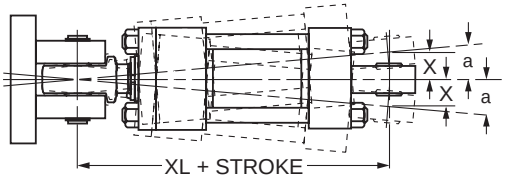

Cap End Mounting

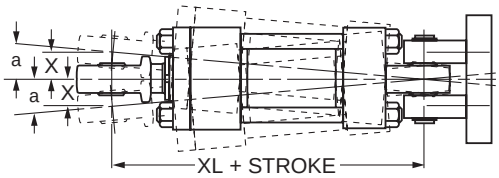

⚠PROP 65 WARNING **WARNING:** This product can expose you to chemicals including **Lead and Lead Compounds** which are known to the State of California to cause cancer and birth defects or other reproductive harm. For more information go to www.P65Warnings.ca.gov

Double Rod Cylinder
Style K

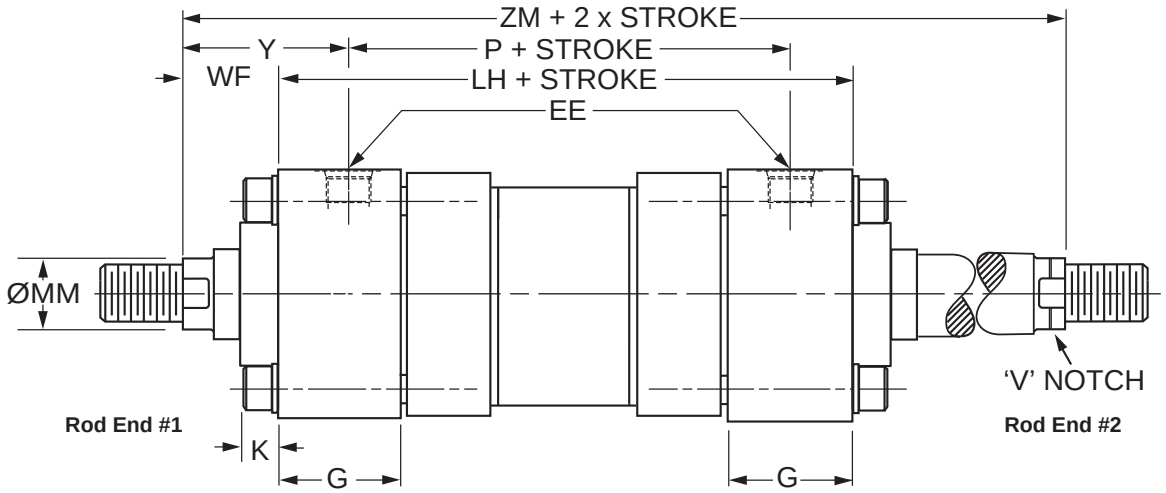

Double Rod End Mounting Styles
See Mounting Groups page in Section H for guidance on double rod end cylinder mounting style selection.

Mounting Styles for Single Rod Models	Mounting Styles for Corresponding Double Rod Models[1]		Dimensions Shown on This Page Supplement Dimensions on 7.00" - 8.00" Bore Pages Listed Below
	Load Connected To Rod On Cylinder Mounting End	Load Connected To Rod Opposite Cylinder Mounting End	
C	KC	KC	104
JJ	KJJ	KHH	105
D	KD	KDB	107
DE	KDE[2]	KDE[2]	109

[1] Connect load to piston rod without 'V' notch. If only one end of the Double Rod Cylinder is to be cushioned, be sure to clearly specify which end this will be.

[2] Specify XI dimension for Styles DD & DE from #1 rod end (without 'V' notch).

Bore Ø	Rod No.	MM Rod Ø	WF	Add Stroke		Add 2X Stroke
				LH	SSK	ZM
7.00	1 (std.)	3.00	2.25	8.50	5.75	13.00
	2	5.00	2.25	8.50	5.75	13.00
	3	3.50	2.25	8.50	5.75	13.00
	4	4.00	2.25	8.50	5.75	13.00
	5	4.50	2.25	8.50	5.75	13.00
8.00	1 (std.)	3.50	2.25	9.50	6.75	14.00
	2	5.50	2.25	9.50	6.75	14.00
	3	4.00	2.25	9.50	6.75	14.00
	4	4.50	2.25	9.50	6.75	14.00
	5	5.00	2.25	9.50	6.75	14.00
Replaces On single rod mounting styles:				**LG**	**SS**	–
				All Mtg. Styles	**C**	**All Mtg. Styles**

How to Use Double Rod Cylinder Dimension Drawings
To determine dimensions for a double rod cylinder, first refer to the desired single rod mounting style cylinder shown on preceding pages of this catalog. (See table above.) After selecting necessary dimensions from that drawing, return to this page supplement the single rod dimensions with those shown on drawing at right and dimension table below. Note that double rod cylinders have a head (Dim. G) at both ends and that dimension LH replaces LG. The double rod dimensions differ from, or are in addition to those for single rod cylinders shown on preceding pages and provide the information needed to completely dimension a double rod cylinder.

On a double rod cylinder where the two rod ends are different, be sure to clearly state which rod end is to be assembled at which end. Port position 1 is standard. If other than standard, specify pos. 2, 3 or 4 when viewed from rod end #1 only. See port position information in Section H.

⚠**PROP 65 WARNING** **WARNING:** This product can expose you to chemicals including **Lead and Lead Compounds** which are known to the State of California to cause cancer and birth defects or other reproductive harm. For more information go to www.P65Warnings.ca.gov

Threaded Flange Dimensions for 8.00" Bore 3HB

Threaded flanges that secure the 8.00” bore 3HB head and cap to the ends of the cylinder body extend beyond the head and cap ‘E’ square. Dimensions of the flange extensions are detailed below.

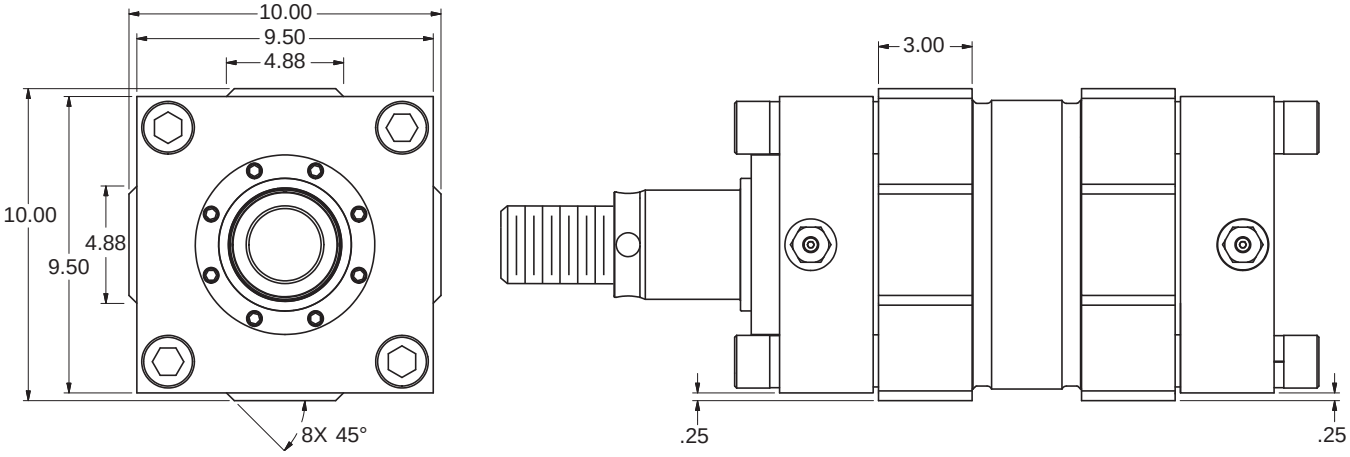

Suggested Machining for Mounting Series 3HB, 8.00" Bore Style C

To install an 8.00" bore Mounting Style C, Series 3HB cylinder, the extension of the threaded flanges below the mounting lug surface must be considered. The drawings and dimensions below can be used as a suggested guide for preparing the machine mounting surface with slots to accommodate the extensions.

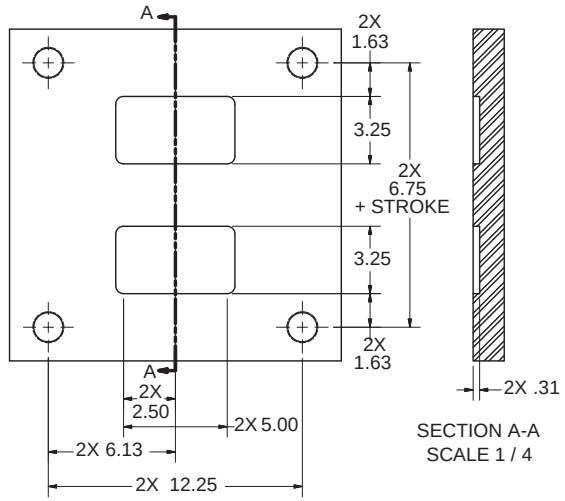

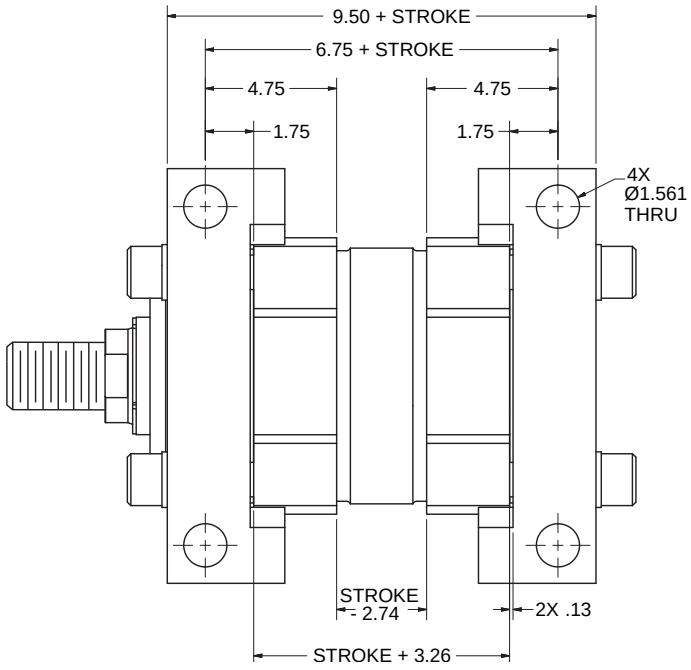

⚠**PROP 65 WARNING** **WARNING:** This product can expose you to chemicals including **Lead and Lead Compounds** which are known to the State of California to cause cancer and birth defects or other reproductive harm. For more information go to www.P65Warnings.ca.gov

Section E

Series 3H Large Bore
Heavy Duty Hydraulic Cylinders

Performance	114
Construction	115
Specifications / Mountings	116
Piston Rod Ends	117
Model Code / How to Order	118-119
Piston Seal Selection	120
Hybrid Composite Bushing	121
TD, TB, TC Mount Dimensions	122
C Mount Dimensions	123
JJ Mount Dimensions	124
JB Mount Dimensions	125
HH Mount Dimensions	126
HB Mount Dimensions	127
BB Mount Dimensions	128
D Mount Dimensions	129
DB Mount Dimensions	130
DD Mount Dimensions	131
Double Rod Cylinders	132

⚠PROP 65 WARNING **WARNING:** This product can expose you to chemicals including **Lead and Lead Compounds** which are known to the State of California to cause cancer and birth defects or other reproductive harm. For more information go to www.P65Warnings.ca.gov

Parker Hannifin Corporation
Cylinder Division
Des Plaines, Illinois USA

The large bore, high pressure hydraulic cylinder Parker designed to meet your needs

Parker Series 3H large bore cylinders provide unmatched reliability, performance, and innovative design features that aid in increasing productivity while reducing operating costs.

Parker's externally removable bolt-on gland assembly makes preventive and routine maintenance quick and easy! In many cases, the cylinder does not have to be removed or disassembled to facilitate service. Our innovative design provides for fast turn around, reduced downtime, and increased productivity.

In addition to our removable gland assembly, Series 3H cylinders also include a multitude of innovative design features such as: anti-extrusion body end seals, floating cushions, hi load piston (standard), and various port and rod end options to meet your application requirements.

Every Series 3H cylinder is individually tested before leaving our plant to assure proper and leak free operation. All Series 3H cylinders come with an eighteen month warranty standard.



⚠**PROP 65 WARNING** **WARNING:** This product can expose you to chemicals including **Lead and Lead Compounds** which are known to the State of California to cause cancer and birth defects or other reproductive harm. For more information go to www.P65Warnings.ca.gov

These innovative design features make Parker Series 3H Large Bore your best choice...

for all your large bore heavy duty hydraulic cylinder applications.

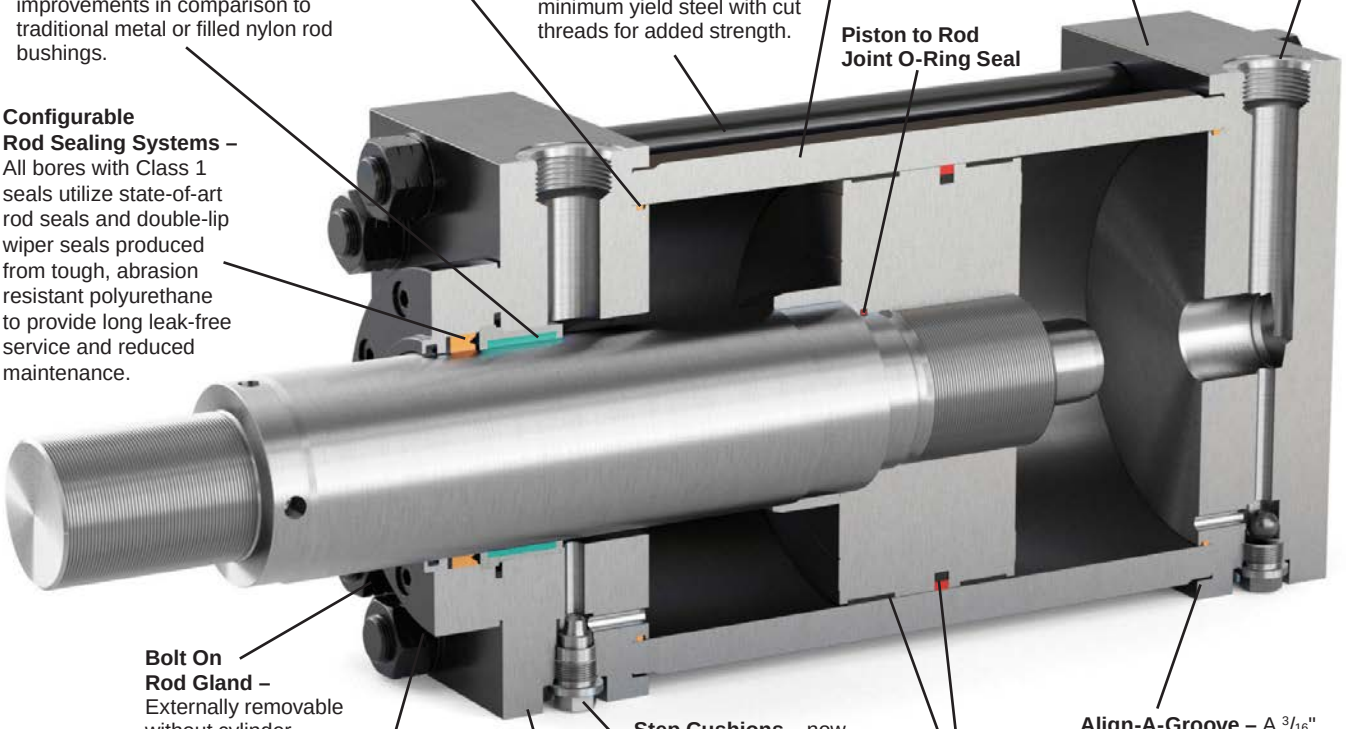

End Seals – Pressure-actuated cylinder body-to-head and cap o-rings with back-up washers, with tough, extrusion resistant polyurethane o-rings utilized on 10" thru 14" bores with Class 1 seals.

The Cylinder Body – Heavy-wall steel tubing is honed to a micro finish bore, providing a wear surface for long lasting piston bearing and seal life.

Precision Block Steel Caps – Bored and grooved to promote concentricity for mating parts.

Ports – SAE O-ring straight thread ports are standard.

Hybrid Composite Wear Ring – Offers significant performance improvements in comparison to traditional metal or filled nylon rod bushings.

High-Strength Tie Rods – Made from 100,000 psi minimum yield steel with cut threads for added strength.

Piston to Rod Joint O-Ring Seal

Configurable Rod Sealing Systems – All bores with Class 1 seals utilize state-of-art rod seals and double-lip wiper seals produced from tough, abrasion resistant polyurethane to provide long leak-free service and reduced maintenance.

Bolt On Rod Gland – Externally removable without cylinder disassembly.

Alloy Steel Tie Rod Nuts – with hardened steel washers.

Precision Block Steel Heads – Bored and grooved to promote concentricity for mating parts.

Step Cushions – now feature captive needle valve adjusters

Four Configurable Piston Sealing Designs – for the most demanding applications. See Piston Seal Selection Page.

Align-A-Groove – A $^{3}/_{16}$" wide surface machined at each end of the cylinder body. Makes precise mounting quick and easy.

⚠**PROP 65 WARNING** **WARNING:** This product can expose you to chemicals including **Lead and Lead Compounds** which are known to the State of California to cause cancer and birth defects or other reproductive harm. For more information go to www.P65Warnings.ca.gov

Parker Hannifin Corporation
Cylinder Division
Des Plaines, Illinois USA

Standard Specifications

- Heavy Duty Service
- Standard Construction – Square Head – Tie Rod Design
- Nominal Pressure – 3000 psi[1]
- Standard Fluid – Hydraulic Oil
- Standard Temperature – -10°F to +165°F[2]
- Bore Sizes – 10.00" through 20.00"
- Piston Rod Diameter – 4.500" through 10.000"
- Mounting Styles – 12 standard styles at various application ratings
- Strokes – Available in any practical stroke length
- Cushions – Optional at either end or both ends of stroke
- Rod Ends – Three Standard Choices – Specials to Order

[1] If hydraulic operating pressure exceeds 3000 psi, send application data for engineering evaluation and recommendation. See Section H for actual design factors.

[2] See Section H for higher temperature service.

In line with our policy of continuing product improvement, specifications in this catalog are subject to change.

Available Mounting Styles

Tie Rods Extended Head End

Style TB 10.00"-14.00"

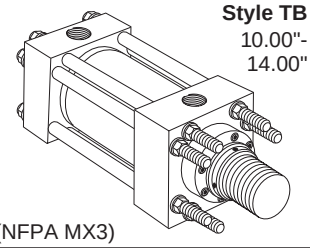

(NFPA MX3)

Tie Rods Extended Cap End

Style TC 10.00"-14.00"

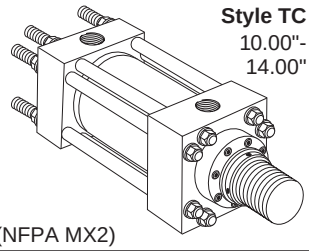

(NFPA MX2)

Tie Rods Extended Both Ends

Style TD 10.00"-14.00"

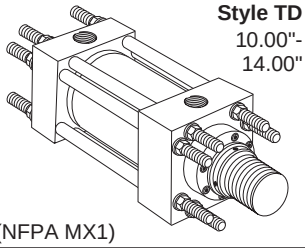

(NFPA MX1)

Head Rectangular

Style JJ 10.00"-20.00"

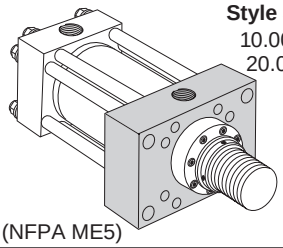

(NFPA ME5)

Head Square Flange

Style JB 10.00"-20.00"

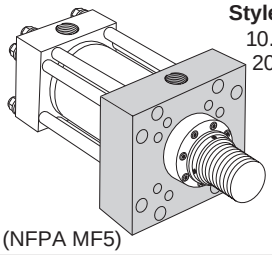

(NFPA MF5)

Cap Rectangular

Style HH 10.00"-20.00"

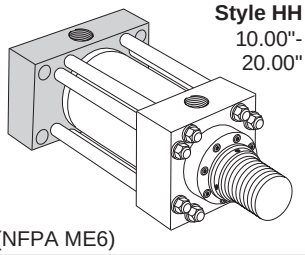

(NFPA ME6)

Cap Square Flange

Style HB 10.00"-20.00"

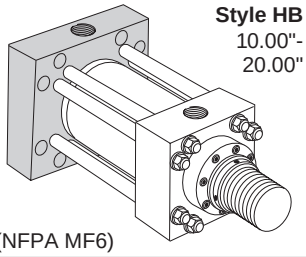

(NFPA MF6)

Side Lug

Style C 10.00"-14.00"

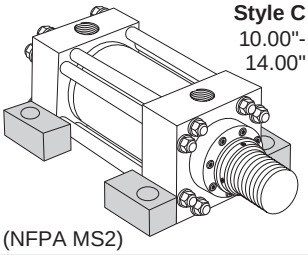

(NFPA MS2)

Cap Fixed Clevis

Style BB 10.00"-20.00"

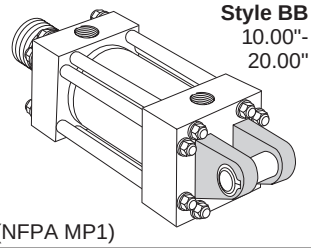

(NFPA MP1)

Head Trunnion

Style D 10.00"-14.00"

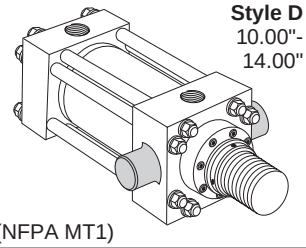

(NFPA MT1)

Cap Trunnion

Style DB 10.00"-14.00"

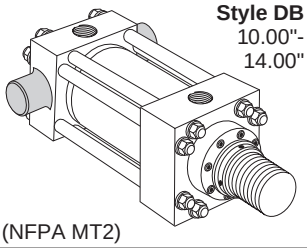

(NFPA MT2)

Intermediate Fixed Trunnion

Style DD 10.00"-14.00"[3]

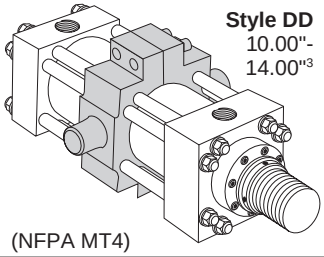

(NFPA MT4)

[3] Consult factory for 16.00"-20.00"

Double Rod Cylinders

Style KC Shown

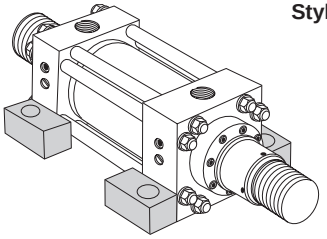

Most of the above illustrated mounting styles are available in double rod cylinders.

⚠**PROP 65 WARNING** **WARNING:** This product can expose you to chemicals including **Lead and Lead Compounds** which are known to the State of California to cause cancer and birth defects or other reproductive harm. For more information go to www.P65Warnings.ca.gov

Rod End Dimensions – 10.00" - 20.00" Bore

Thread Style 4 (NFPA Style SM)
Small Male

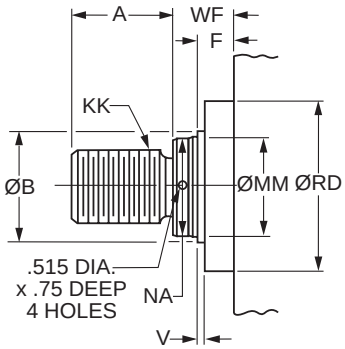

Thread Style 55[1]
Flanged Rod End

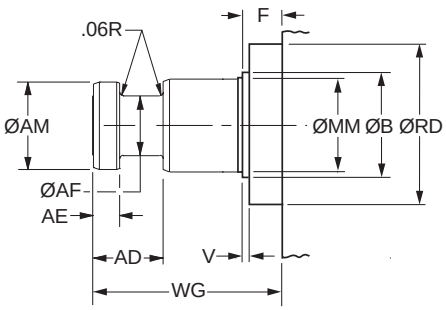

Thread Style 9[2] (NFPA Style SF)
Small Female

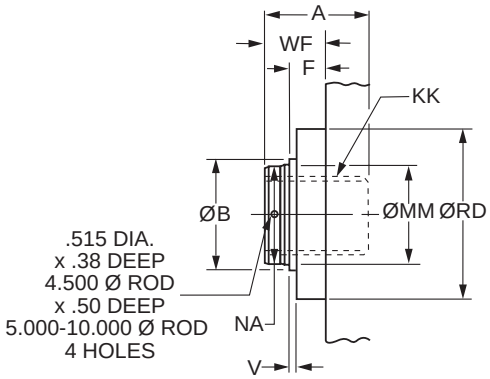

Rod End Dimensions – 10.00" - 20.00" Bore

Bore Ø	Rod No.	MM Rod Ø	Thread Style 4 & 9 KK	Rod Extensions and Pilot Dimensions						
				A	B Ø +.000 -.005	F	NA	RD +.000 -.005	V	WF
10.00	1 (std.)	4.500	3 1/4-12	4.50	5.249	1.94	4.38	8.249	0.25	2.94
	2	7.000	5-12	7.00	7.999	1.94	6.88	10.499	0.38	3.50
	3	5.000	3 1/2-12	5.00	5.749	1.94	4.88	8.874	0.25	3.19
	4	5.500	4-12	5.50	6.249	1.94	5.38	9.374	0.25	3.19
12.00	1 (std.)	5.500	4-12	5.50	6.249	1.94	5.38	9.374	0.25	3.19
	2	8.000	5 3/4-12	8.00	8.999	1.94	7.88	12.499	0.38	4.00
	3	7.000	5-12	7.00	7.999	1.94	6.88	10.499	0.38	3.50
14.00	1 (std.)	7.000	5-12	7.00	7.999	1.94	6.88	10.499	0.38	3.50
	2	10.000	7 1/4-12	10.00	10.999	1.94	9.88	14.499	0.38	4.50
	3	8.000	5 3/4-12	8.00	8.999	1.94	7.88	12.499	0.38	4.00
16.00	1	8.000	5 3/4-12	8.00	8.999	1.94	7.88	12.499	0.38	4.00
	3	9.000	6 1/2-12	9.00	9.999	1.94	8.88	13.499	0.38	4.25
	4	10.000	7 1/4-12	10.00	10.999	1.94	9.88	14.499	0.38	4.50
18.00	1	9.000	6 1/2-12	9.00	9.999	1.94	8.88	13.499	0.38	4.25
	3	10.000	7 1/4-12	10.00	10.999	1.94	9.88	14.499	0.38	4.50
20.00	1	10.000	7 1/4-12	10.00	10.999	1.94	9.88	14.499	0.38	4.50

"Special" Thread Style 3

Special thread, extension, rod eye, blank, etc., are also available.

To order, specify "Style 3" and give desired dimensions for KK, A & WF. If otherwise special, furnish dimensioned sketch.

[1] For special WG dimension, specify "Style 3" and give desired dimension for WG. For other changes, place "S" in the model code, and describe rod end with dimensioned sketch.

[2] Style 9 stroke restrictions may apply. See Style 9 Minimum Stroke Table on How to Order page for details.

Style 55 Rod End

MM Rod Ø	AD	AE +.001 -.001	AF Ø	AM Ø	WG[1]
4.500	3.19	1.499	3.50	4.45	6.50
5.000	3.19	1.499	3.88	4.95	6.63
5.500	3.94	1.874	4.38	5.45	7.50
7.000	4.06	1.999	5.75	6.95	8.44
8.000	4.06	1.999	6.50	7.95	8.69
9.000	4.63	2.374	7.25	8.95	8.75
10.000	4.63	2.374	8.00	9.95	9.75

⚠ **PROP 65 WARNING** **WARNING:** This product can expose you to chemicals including **Lead and Lead Compounds** which are known to the State of California to cause cancer and birth defects or other reproductive harm. For more information go to www.P65Warnings.ca.gov

3H Large Bore Model Code

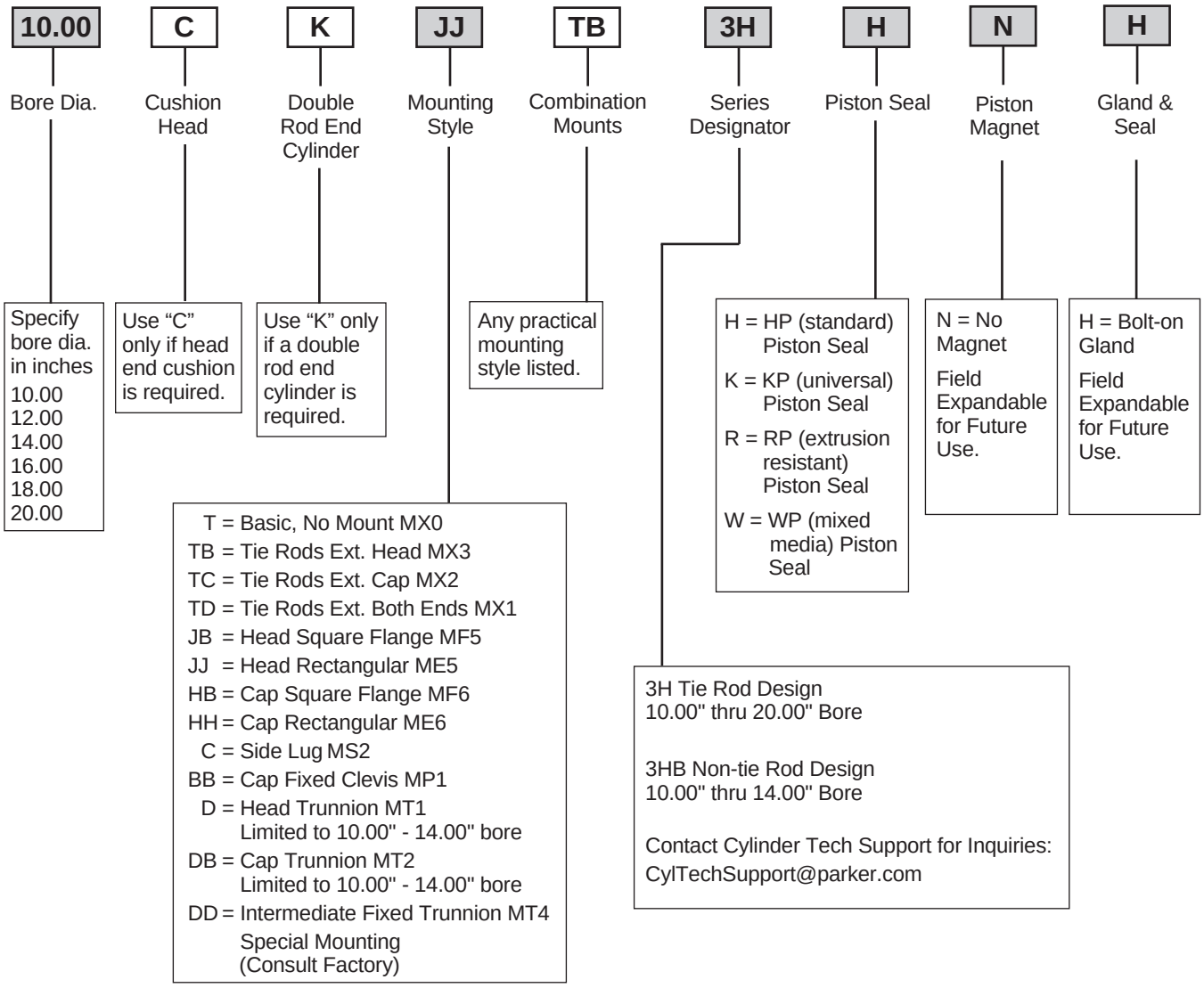

Shaded boxes identify required model number fields.

⚠ **PROP 65 WARNING** **WARNING:** This product can expose you to chemicals including **Lead and Lead Compounds** which are known to the State of California to cause cancer and birth defects or other reproductive harm. For more information go to www.P65Warnings.ca.gov

3H Large Bore Model Code

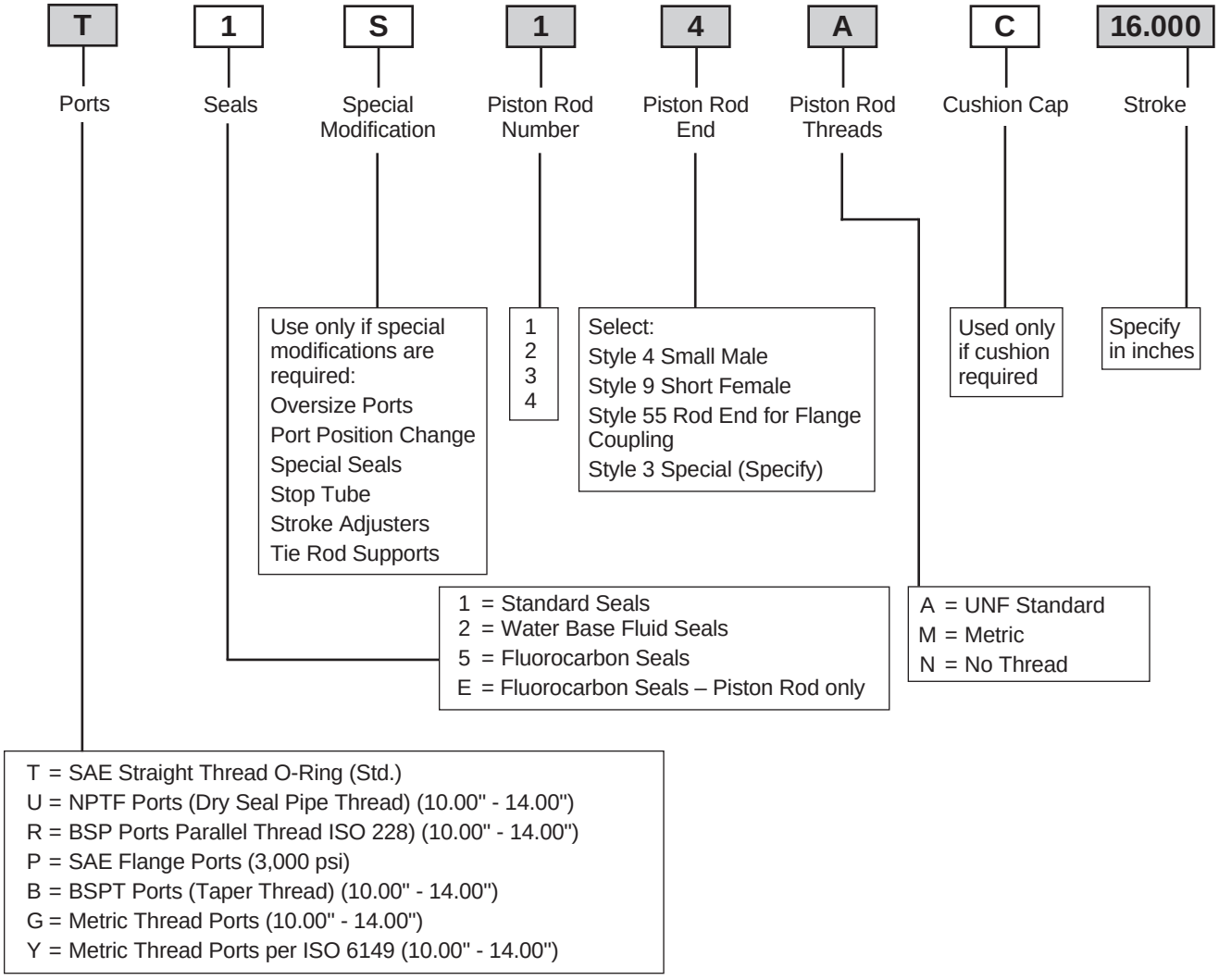

Style 9 Minimum Stroke Table

Bore Ø	Rod Ø	Minimum Stroke
10.00	4.500	1.125
	5.000	1.375
	5.500	2.000
	7.000	3.125
12.00	5.500	1.250
	7.000	2.375
	8.000	3.125
14.00	7.000	2.000
	8.000	2.750
	10.000	4.250

Bore Ø	Rod Ø	Minimum Stroke
16.00	8.000	1.750
	9.000	2.500
	10.000	3.250
18.00	9.000	1.500
	10.000	2.250
20.00	10.000	1.250

Shaded boxes identify required model number fields.

⚠**PROP 65 WARNING** **WARNING:** This product can expose you to chemicals including **Lead and Lead Compounds** which are known to the State of California to cause cancer and birth defects or other reproductive harm. For more information go to www.P65Warnings.ca.gov

Piston Seal Selection

Parker Piston Seal options HP, KP, RP and WP are available in a number of different Seal Classes. Because the Parker Model Number includes Seal Class but does not include a code for piston seal style, a default piston seal style is designated for each seal class. In the table below rows list each seal class and columns column list each piston style. Available piston styles for each seal class are identified with an 'X' and the default piston seal style is in the shaded cell. To specify an available piston seal style that is not standard, place an 'S' in the Special Modification field of the model number and specify the required piston seal style with text.

Seal Class	Piston Seal Options (Shaded cell is default standard)			
	HM	**KM**	**RM**	**WM**
TG - Class 1 - Polyurethane & Nitrile	X	X	X	X
NG - Class 2 - Nitrile	N/A	X	X	X
XG - Class 3 - EPR	N/A	X	X	X
LG - Class 4 - Low Temperature Nitrile	X	X	X	N/A

One Common Piston for 4 Seal Styles

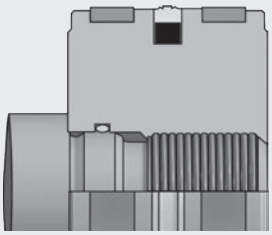

Standard HP style with polyurethane piston seal – excellent for most cycling and load holding applications.

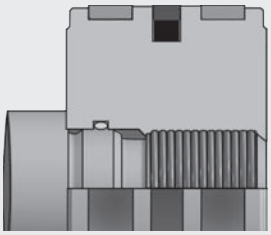

Optional RP style with thermoplastic piston seal – superior extrusion resistance to extreme pressure spikes with drift-free performance.

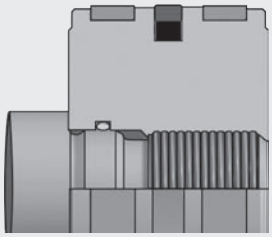

Optional KP style with filled PTFE piston seal – low friction, high heat resistance for cycling and load holding service.

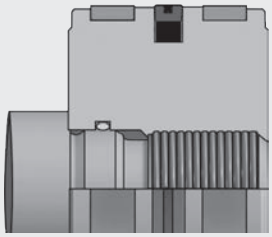

Optional WP style mixed media piston seal – low friction primary seal with redundant elastomer delivers superior performance with dissimilar media on either side of the piston.

⚠**PROP 65 WARNING** **WARNING:** This product can expose you to chemicals including **Lead and Lead Compounds** which are known to the State of California to cause cancer and birth defects or other reproductive harm. For more information go to www.P65Warnings.ca.gov

3H Series Large Bore Hybrid Composite Bushing

Innovative Solutions from Parker Hannifin Cylinders



Customer Value Proposition:

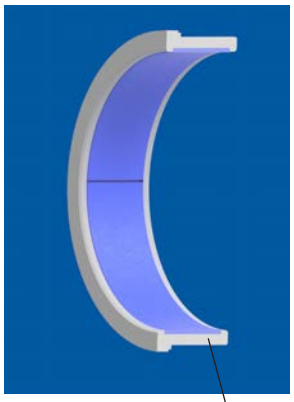

The Parker Cylinders 3H Series Large Bore Hybrid Composite Bushing installed inboard of the primary rod sealing package offers significant performance improvements in comparison to Metal or Filled Nylon Rod Bushings

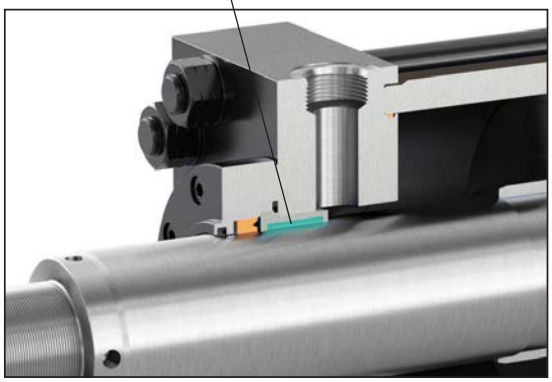

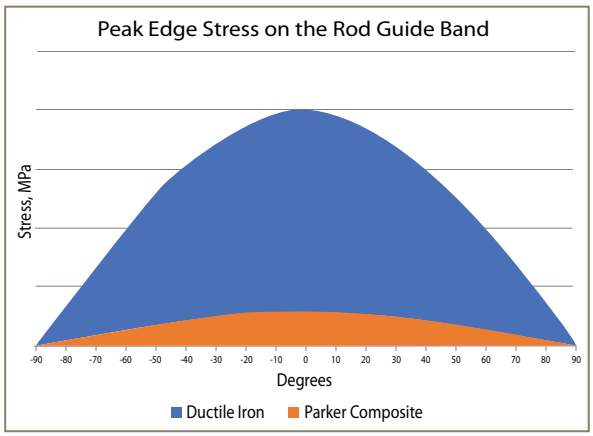

Key Takeaway:
Contact stress is reduced when any side load force is distributed over a greater area. See how Parker Cylinders' composite bearing performs over Ductile Iron.

Product Features:

Parker's Hybrid Composite Versus Metal Bushings

- Better ability to conform to bending deflections resulting in lower peak stresses
- Self lubricating with lower friction
- Ideal for High Water Content fluids

Parker's Hybrid Composite Versus Filled Nylon Bushings

- Higher strength
- Very low water absorption
- Wider temperature range

Contact Information:

Parker Hannifin
Cylinder Division
500 S. Wolf Rd.
Des Plaines, IL 60016
www.parkercylinderdistributor.com

phone 847 298 2400
fax 800 892 1008

⚠PROP 65 WARNING **WARNING:** This product can expose you to chemicals including **Lead and Lead Compounds** which are known to the State of California to cause cancer and birth defects or other reproductive harm. For more information go to www.P65Warnings.ca.gov

Tie Rods Extended Both Ends Mounting
Style TD
(NFPA Style MX1)

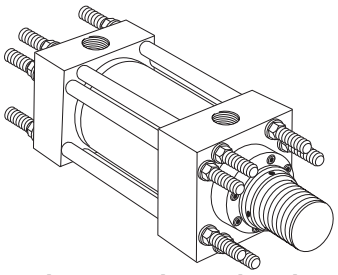

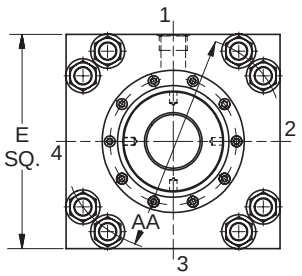

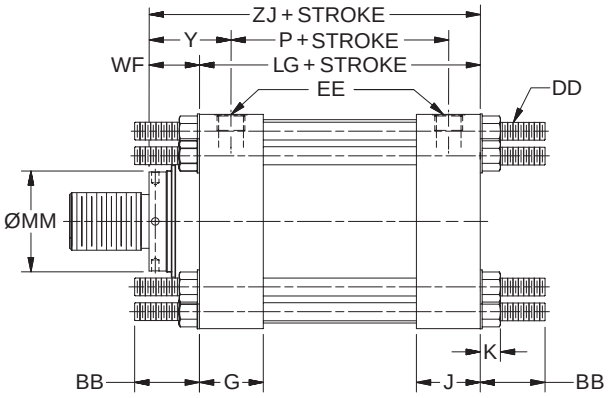

Style TD – Dimensional and Mounting Data

Bore Ø	Rod No.	MM Rod Ø	AA	BB	DD	E	EE			G	J	K Max.	WF	Y	Add Stroke		
							NPTF[1]	SAE Flange Ports[2]	SAE Straight Thread[3]						LG	P	ZJ
10.00	1 (std.)	4.500	13.00	4.13	1 1/8-12	12.63	2.00	2.00	24	3.69	3.69	1.17	2.94	4.75	12.13	8.50	15.06
	2	7.000	13.00	4.13	1 1/8-12	12.63	2.00	2.00	24	3.69	3.69	1.17	3.50	5.31	12.13	8.50	15.63
	3	5.000	13.00	4.13	1 1/8-12	12.63	2.00	2.00	24	3.69	3.69	1.17	3.19	5.00	12.13	8.50	15.31
	4	5.500	13.00	4.13	1 1/8-12	12.63	2.00	2.00	24	3.69	3.69	1.17	3.19	5.00	12.13	8.50	15.31
12.00	1 (std.)	5.500	15.50	4.50	1 1/4-12	14.88	2.50	2.50[4]	24	4.44	4.44	1.30	3.19	5.38	14.50	10.13	17.69
	2	8.000	15.50	4.50	1 1/4-12	14.88	2.50	2.50[4]	24	4.44	4.44	1.30	4.00	6.19	14.50	10.13	18.50
	3	7.000	15.50	4.50	1 1/4-12	14.88	2.50	2.50[4]	24	4.44	4.44	1.30	3.50	5.69	14.50	10.13	18.00
14.00	1 (std.)	7.000	17.38	4.50	1 1/4-12	17.13	2.50	2.50[4]	24	4.88	4.88	1.30	3.50	5.88	15.63	10.88	19.13
	2	10.000	17.38	4.50	1 1/4-12	17.13	2.50	2.50[4]	24	4.88	4.88	1.30	4.50	6.88	15.63	10.88	20.13
	3	8.000	17.38	4.50	1 1/4-12	17.13	2.50	2.50[4]	24	4.88	4.88	1.30	4.00	6.38	15.63	10.88	19.63

[1] NPTF ports are available at no extra charge.
[2] Optional SAE flange ports may be specified – flange to be supplied by customer. See Optional SAE Flange Port Pattern table for dimensions.
[3] SAE straight thread ports are standard and are indicated by port number.
[4] 2.50 SAE flange port is rated at 2500 psi

Optional SAE Flange Port Pattern

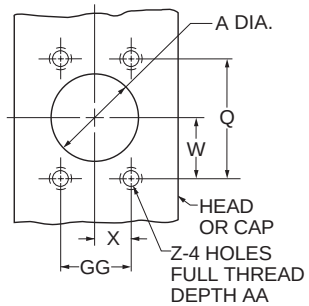

Nom. Flange Size	A	Q	GG	W	X	Z-THD UNC-2B	AA Min.	SAE
2	2.00	3.062	1.688	1.53	0.84	1/2-13	1.06	32
2 1/2	2.50	3.500	2.000	1.75	1.00	1/2-13	1.19	40

Style TD – Tie Rod Information

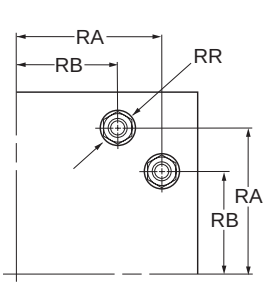

10.00", 12.00" Bores

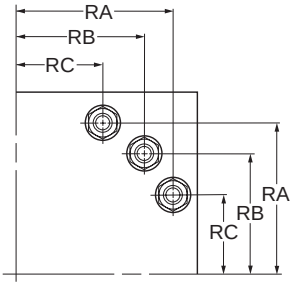

14.00" Bore

Bore Ø	10.00	12.00	14.00
Tie Rod Thread	1 1/8-12	1 1/4-12	1 1/4-12
RA	5.291	6.270	7.485
RB	3.775	4.555	6.143
RC	—	—	4.409
RR	2.00	2.19	2.19

Style TB

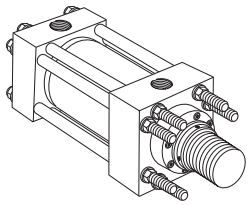

Style TC

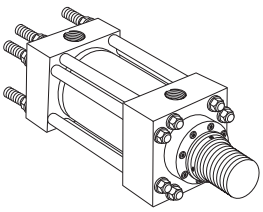

Dimensions for TB and TC Mount may be obtained from the above dimensional table.

⚠PROP 65 WARNING **WARNING:** This product can expose you to chemicals including **Lead and Lead Compounds** which are known to the State of California to cause cancer and birth defects or other reproductive harm. For more information go to www.P65Warnings.ca.gov

Side Lugs Mounting
Style C
(NFPA Style MS2)

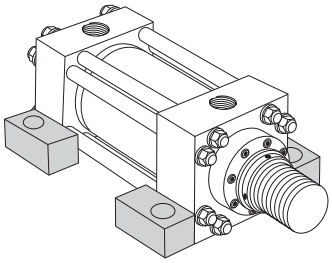

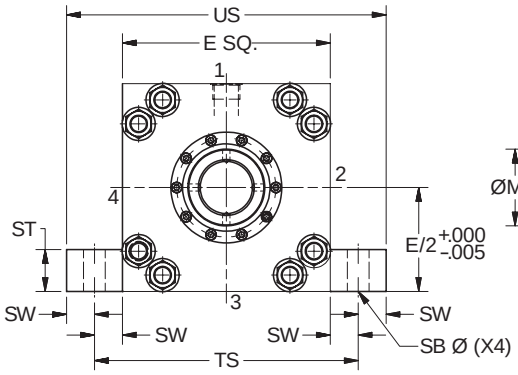

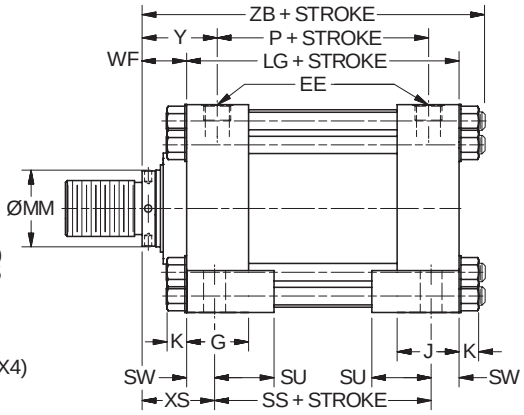

Style C – Dimensional and Mounting Data

Bore Ø	Rod No.	MM Rod Ø	E	Ports (EE)			G	J	K Max.	SB Ø	ST	SU	SW	Y	TS	US	WF	XS
				NPTF[1]	SAE Flange Port[2]	SAE Straight Thread Port[3]												
10.00	1 (std.)	4.500	12.63	2.00	2.00	24	3.69	3.69	1.17	1.563	2.25	3.50	1.63	4.75	15.88	19.13	2.94	4.56
	2	7.000	12.63	2.00	2.00	24	3.69	3.69	1.17	1.563	2.25	3.50	1.63	5.31	15.88	19.13	3.50	5.13
	3	5.000	12.63	2.00	2.00	24	3.69	3.69	1.17	1.563	2.25	3.50	1.63	5.00	15.88	19.13	3.19	4.81
	4	5.500	12.63	2.00	2.00	24	3.69	3.69	1.17	1.563	2.25	3.50	1.63	5.00	15.88	19.13	3.19	4.81
12.00	1 (std.)	5.500	14.88	2.50	2.50[4]	24	4.44	4.44	1.30	1.563	3.00	4.25	2.00	5.38	18.88	22.88	3.19	5.19
	2	8.000	14.88	2.50	2.50[4]	24	4.44	4.44	1.30	1.563	3.00	4.25	2.00	6.19	18.88	22.88	4.00	6.00
	3	7.000	14.88	2.50	2.50[4]	24	4.44	4.44	1.30	1.563	3.00	4.25	2.00	5.69	18.88	22.88	3.50	5.50
14.00	1 (std.)	7.000	17.13	2.50	2.50[4]	24	4.88	4.88	1.30	2.313	4.00	4.75	2.25	5.88	21.63	26.13	3.50	5.75
	2	10.000	17.13	2.50	2.50[4]	24	4.88	4.88	1.30	2.313	4.00	4.75	2.25	6.88	21.63	26.13	4.50	6.75
	3	8.000	17.13	2.50	2.50[4]	24	4.88	4.88	1.30	2.313	4.00	4.75	2.25	6.38	21.63	26.13	4.00	6.25

[1]NPTF ports are available at no extra charge.
[2]Optional SAE flange ports may be specified – flange to be supplied by customer. See Optional SAE Flange Port Pattern table for dimensions.
[3]SAE straight thread ports are standard and are indicated by port number.
[4] 2.50 SAE flange port is rated at 2500 psi

Style C – Dimensional and Mounting Data (cont.)

Bore Ø	Rod No.	MM Rod Ø	Add Stroke			
			LG	P	SS	ZB Max.
10.00	1 (std.)	4.500	12.13	8.50	8.88	16.49
	2	7.000	12.13	8.50	8.88	17.05
	3	5.000	12.13	8.50	8.88	16.74
	4	5.500	12.13	8.50	8.88	16.74
12.00	1 (std.)	5.500	14.50	10.13	10.50	19.24
	2	8.000	14.50	10.13	10.50	20.05
	3	7.000	14.50	10.13	10.50	19.55
14.00	1 (std.)	7.000	15.63	10.88	11.13	20.68
	2	10.000	15.63	10.88	11.13	21.68
	3	8.000	15.63	10.88	11.13	21.18

Optional SAE Flange Port Pattern

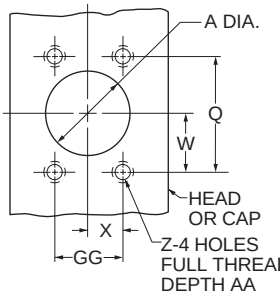

Nom. Flange Size	A	Q	GG	W	X	Z-THD UNC-2B	AA Min.	SAE
2	2.00	3.062	1.688	1.53	0.84	1/2-13	1.06	32
2 1/2	2.50	3.500	2.000	1.75	1.00	1/2-13	1.19	40

⚠**PROP 65 WARNING** **WARNING:** This product can expose you to chemicals including **Lead and Lead Compounds** which are known to the State of California to cause cancer and birth defects or other reproductive harm. For more information go to www.P65Warnings.ca.gov

Head Rectangular Mounting

Style JJ
(NFPA Style ME5)

(10.00-14.00 Bore)

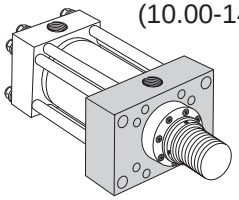

(16.00-20.00 Bore)

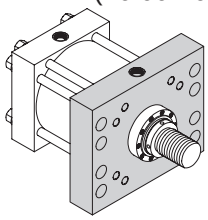

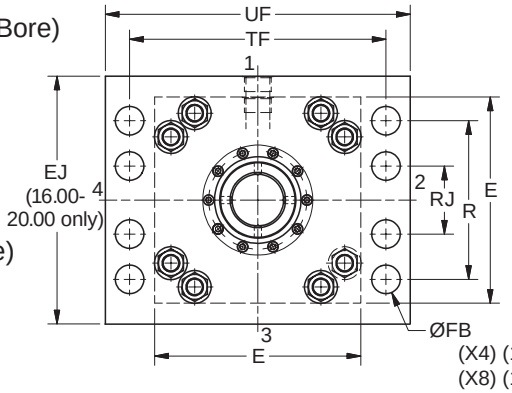

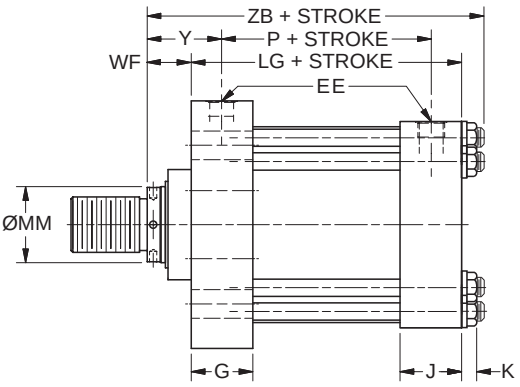

Style JJ – Dimensional and Mounting Data

Bore Ø	Rod No.	MM Rod Ø	E	EJ	Ports (EE)			FB Ø	G	J	K Max.	R	RJ	TF	UF	WF	Y	Add Stroke		
					NPTF[1]	SAE Flange Port[2]	SAE Straight Thread Port[3]											LG	P	ZB Max.
10.00	1 (std.)	4.500	12.63	-	2.00	2.00	24	1.81	3.69	3.69	1.17	9.62	-	15.88	19.00	2.94	4.75	12.13	8.50	16.49
	2	7.000	12.63	-	2.00	2.00	24	1.81	3.69	3.69	1.17	9.62	-	15.88	19.00	3.50	5.31	12.13	8.50	17.05
	3	5.000	12.63	-	2.00	2.00	24	1.81	3.69	3.69	1.17	9.62	-	15.88	19.00	3.19	5.00	12.13	8.50	16.74
	4	5.500	12.63	-	2.00	2.00	24	1.81	3.69	3.69	1.17	9.62	-	15.88	19.00	3.19	5.00	12.13	8.50	16.74
12.00	1 (std.)	5.500	14.88	-	2.50	2.50[4]	24	2.06	4.44	4.44	1.30	11.45	-	18.50	22.00	3.19	5.38	14.50	10.13	19.24
	2	8.000	14.88	-	2.50	2.50[4]	24	2.06	4.44	4.44	1.30	11.45	-	18.50	22.00	4.00	6.19	14.50	10.13	20.05
	3	7.000	14.88	-	2.50	2.50[4]	24	2.06	4.44	4.44	1.30	11.45	-	18.50	22.00	3.50	5.69	14.50	10.13	19.55
14.00	1 (std.)	7.000	17.13	-	2.50	2.50[4]	24	2.31	4.88	4.88	1.30	13.26	-	21.00	25.00	3.50	5.88	15.63	10.88	20.68
	2	10.000	17.13	-	2.50	2.50[4]	24	2.31	4.88	4.88	1.30	13.26	-	21.00	25.00	4.50	6.88	15.63	10.88	21.68
	3	8.000	17.13	-	2.50	2.50[4]	24	2.31	4.88	4.88	1.30	13.26	-	21.00	25.00	4.00	6.38	15.63	10.88	21.18
16.00	1 (std.)	8.000	19.00	20.00	-	3.00[5]	24	1.81	5.88	5.88	1.70	15.50	8.00	21.00	24.50	4.00	7.00	18.13	12.13	24.08
	3	9.000	19.00	20.00	-	3.00[5]	24	1.81	5.88	5.88	1.70	15.50	8.00	21.00	24.50	4.25	7.25	18.13	12.13	24.33
	4	10.000	19.00	20.00	-	3.00[5]	24	1.81	5.88	5.88	1.70	15.50	8.00	21.00	24.50	4.50	7.50	18.13	12.13	24.58
18.00	1 (std.)	9.000	22.00	23.00	-	3.00[5]	24	2.06	6.88	6.88	1.70	18.00	7.25	24.25	28.25	4.25	7.25	21.13	15.13	27.33
	3	10.000	22.00	23.00	-	3.00[5]	24	2.06	6.88	6.88	1.70	18.00	7.25	24.25	28.25	4.50	7.50	21.13	15.13	27.58
20.00	1 (std.)	10.000	24.00	25.00	-	3.00[5]	24	2.06	7.88	7.88	1.70	20.00	8.00	26.50	30.50	4.50	7.50	23.63	17.63	30.08

[1] NPTF ports are available at no extra charge.
[2] Optional SAE flange ports may be specified – flange to be supplied by customer. See Optional SAE Flange Port Pattern table for dimensions.
[3] SAE straight thread ports are standard and are indicated by port number.
[4] 2.50 SAE flange port is rated at 2500 psi
[5] 3.00 SAE flange port is rated at 2000 psi

Optional SAE Flange Port Pattern

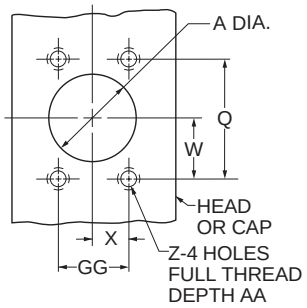

Nom. Flange Size	A	Q	GG	W	X	Z-THD UNC-2B	AA Min.	SAE
2	2.00	3.062	1.688	1.53	0.84	1/2-13	1.06	32
2 1/2	2.50	3.500	2.000	1.75	1.00	1/2-13	1.19	40
3	3.00	4.188	2.438	2.09	1.22	5/8-11	1.19	48

⚠ **PROP 65 WARNING** **WARNING:** This product can expose you to chemicals including **Lead and Lead Compounds** which are known to the State of California to cause cancer and birth defects or other reproductive harm. For more information go to www.P65Warnings.ca.gov

Head Square Flange Mounting
Style JB
(NFPA Style MF5)

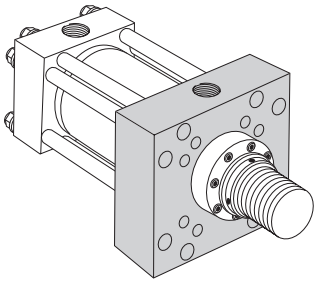

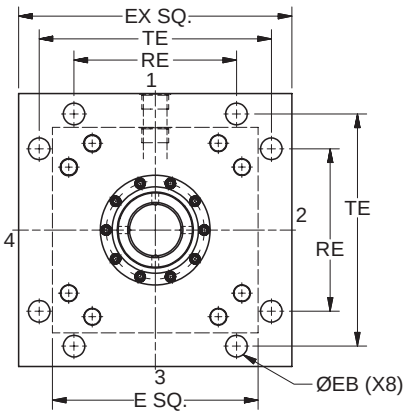

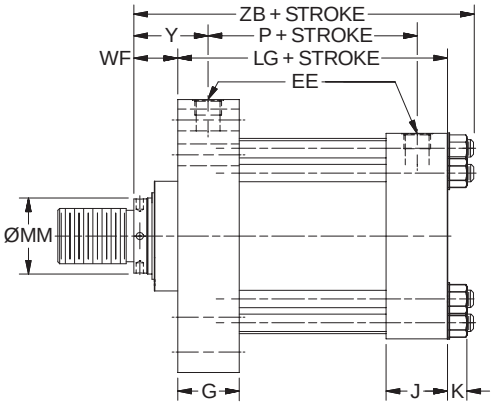

Style JB – Dimensional and Mounting Data

Bore Ø	Rod No.	MM Rod Ø	E	EB Ø	Ports (EE)			EX	G	J	K Max.	RE	TE	WF	Y	Add Stroke		
					NPTF[1]	SAE Flange Port[2]	SAE Straight Thread Port[3]									LG	P	ZB Max.
10.00	1 (std.)	4.500	12.63	1.31	2.00	2.00	24	16.63	3.69	3.69	1.17	9.89	14.13	2.94	4.75	12.13	8.50	16.49
	2	7.000	12.63	1.31	2.00	2.00	24	16.63	3.69	3.69	1.17	9.89	14.13	3.50	5.31	12.13	8.50	17.05
	3	5.000	12.63	1.31	2.00	2.00	24	16.63	3.69	3.69	1.17	9.89	14.13	3.19	5.00	12.13	8.50	16.74
	4	5.500	12.63	1.31	2.00	2.00	24	16.63	3.69	3.69	1.17	9.89	14.13	3.19	5.00	12.13	8.50	16.74
12.00	1 (std.)	5.500	14.88	1.56	2.50	2.50[4]	24	19.75	4.44	4.44	1.30	11.75	16.79	3.19	5.38	14.50	10.13	19.24
	2	8.000	14.88	1.56	2.50	2.50[4]	24	19.75	4.44	4.44	1.30	11.75	16.79	4.00	6.19	14.50	10.13	20.05
	3	7.000	14.88	1.56	2.50	2.50[4]	24	19.75	4.44	4.44	1.30	11.75	16.79	3.50	5.69	14.50	10.13	19.55
14.00	1 (std.)	7.000	17.13	1.81	2.50	2.50[4]	24	21.75	4.88	4.88	1.30	12.90	18.43	3.50	5.88	15.63	10.88	20.68
	2	10.000	17.13	1.81	2.50	2.50[4]	24	21.75	4.88	4.88	1.30	12.90	18.43	4.50	6.88	15.63	10.88	21.68
	3	8.000	17.13	1.81	2.50	2.50[4]	24	21.75	4.88	4.88	1.30	12.90	18.43	4.00	6.38	15.63	10.88	21.18
16.00	1 (std.)	8.000	19.00	1.81	-	3.00[5]	24	24.50	5.88	5.88	1.70	15.28	21.03	4.00	7.00	18.13	12.13	24.08
	3	9.000	19.00	1.81	-	3.00[5]	24	24.50	5.88	5.88	1.70	15.28	21.03	4.25	7.25	18.13	12.13	24.33
	4	10.000	19.00	1.81	-	3.00[5]	24	24.50	5.88	5.88	1.70	15.28	21.03	4.50	7.50	18.13	12.13	24.58
18.00	1 (std.)	9.000	22.00	2.06	-	3.00[5]	24	26.50	6.88	6.88	1.70	16.45	22.65	4.25	7.25	21.13	15.13	27.33
	3	10.000	22.00	2.06	-	3.00[5]	24	26.50	6.88	6.88	1.70	16.45	22.65	4.50	7.50	21.13	15.13	27.58
20.00	1 (std.)	10.000	24.00	2.06	-	3.00[5]	24	29.00	7.88	7.88	1.70	18.07	24.87	4.50	7.50	23.63	17.63	30.08

[1] NPTF ports are available at no extra charge.

[2] Optional SAE flange ports may be specified – flange to be supplied by customer. See Optional SAE Flange Port Pattern table for dimensions.

[3] SAE straight thread ports are standard and are indicated by port number.

[4] 2.50 SAE flange port is rated at 2500 psi

[5] 3.00 SAE flange port is rated at 2000 psi

Optional SAE Flange Port Pattern

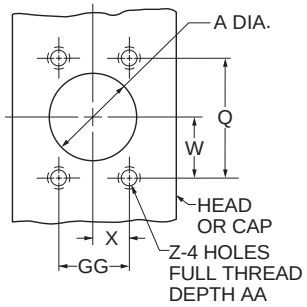

Nom. Flange Size	A	Q	GG	W	X	Z-THD UNC-2B	AA Min.	SAE
2	2.00	3.062	1.688	1.53	0.84	1/2-13	1.06	32
2 1/2	2.50	3.500	2.000	1.75	1.00	1/2-13	1.19	40
3	3.00	4.188	2.438	2.09	1.22	5/8-11	1.19	48

⚠**PROP 65 WARNING** **WARNING:** This product can expose you to chemicals including **Lead and Lead Compounds** which are known to the State of California to cause cancer and birth defects or other reproductive harm. For more information go to www.P65Warnings.ca.gov

Cap Rectangular Mounting
Style HH
(NFPA Style ME6)

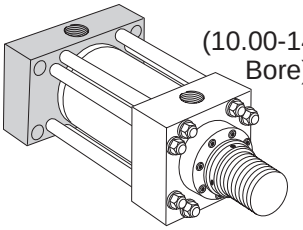

(10.00-14.00 Bore)

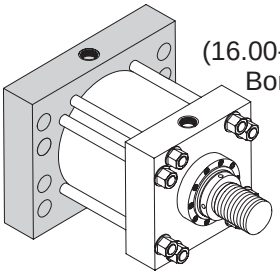

(16.00-20.00 Bore)

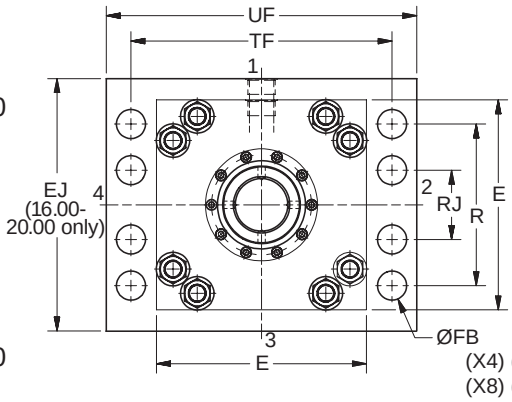

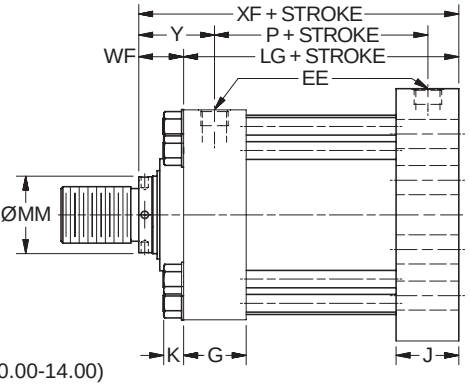

Style HH – Dimensional and Mounting Data

Bore Ø	Rod No.	MM Rod Ø	E	Ports (EE)			EJ	FB Ø	G	J	K Max.	R	RJ	TF	UF	WF	Y	Add Stroke		
				NPTF[1]	SAE Flange Port[2]	SAE Straight Thread Port[3]												LG	P	XF
10.00	1 (std.)	4.500	12.63	2.00	2.00	24	-	1.81	3.69	3.69	1.17	9.62	-	15.88	19.00	2.94	4.75	12.13	8.50	15.06
	2	7.000	12.63	2.00	2.00	24	-	1.81	3.69	3.69	1.17	9.62	-	15.88	19.00	3.50	5.31	12.13	8.50	15.63
	3	5.000	12.63	2.00	2.00	24	-	1.81	3.69	3.69	1.17	9.62	-	15.88	19.00	3.19	5.00	12.13	8.50	15.31
	4	5.500	12.63	2.00	2.00	24	-	1.81	3.69	3.69	1.17	9.62	-	15.88	19.00	3.19	5.00	12.13	8.50	15.31
12.00	1 (std.)	5.500	14.88	2.50	2.50[4]	24	-	2.06	4.44	4.44	1.30	11.45	-	18.50	22.00	3.19	5.38	14.50	10.13	17.69
	2	8.000	14.88	2.50	2.50[4]	24	-	2.06	4.44	4.44	1.30	11.45	-	18.50	22.00	4.00	6.19	14.50	10.13	18.50
	3	7.000	14.88	2.50	2.50[4]	24	-	2.06	4.44	4.44	1.30	11.45	-	18.50	22.00	3.50	5.69	14.50	10.13	18.00
14.00	1 (std.)	7.000	17.13	2.50	2.50[4]	24	-	2.31	4.88	4.88	1.30	13.26	-	21.00	25.00	3.50	5.88	15.63	10.88	19.13
	2	10.000	17.13	2.50	2.50[4]	24	-	2.31	4.88	4.88	1.30	13.26	-	21.00	25.00	4.50	6.88	15.63	10.88	20.13
	3	8.000	17.13	2.50	2.50[4]	24	-	2.31	4.88	4.88	1.30	13.26	-	21.00	25.00	4.00	6.38	15.63	10.88	19.63
16.00	1 (std.)	8.000	19.00	-	3.00[5]	24	20.00	1.81	5.88	5.88	1.70	15.50	8.00	21.00	24.50	4.00	7.00	18.13	12.13	22.13
	3	9.000	19.00	-	3.00[5]	24	20.00	1.81	5.88	5.88	1.70	15.50	8.00	21.00	24.50	4.25	7.25	18.13	12.13	22.38
	4	10.000	19.00	-	3.00[5]	24	20.00	1.81	5.88	5.88	1.70	15.50	8.00	21.00	24.50	4.50	7.50	18.13	12.13	22.63
18.00	1 (std.)	9.000	22.00	-	3.00[5]	24	23.00	2.06	6.88	6.88	1.70	18.00	7.25	24.25	28.25	4.25	7.25	21.13	15.13	25.38
	3	10.000	22.00	-	3.00[5]	24	23.00	2.06	6.88	6.88	1.70	18.00	7.25	24.25	28.25	4.50	7.50	21.13	15.13	25.63
20.00	1 (std.)	10.000	24.00	-	3.00[5]	24	25.00	2.06	7.88	7.88	1.70	20.00	8.00	26.50	30.50	4.50	7.50	23.63	17.63	28.13

[1]NPTF ports are available at no extra charge.
[2]Optional SAE flange ports may be specified – flange to be supplied by customer. See Optional SAE Flange Port Pattern table for dimensions.
[3]SAE straight thread ports are standard and are indicated by port number.
[4] 2.50 SAE flange port is rated at 2500 psi
[5] 3.00 SAE flange port is rated at 2000 psi

Optional SAE Flange Port Pattern

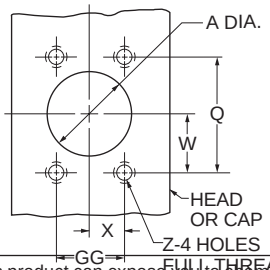

Nom. Flange Size	A	Q	GG	W	X	Z-THD UNC-2B	AA Min.	SAE
2	2.00	3.062	1.688	1.53	0.84	1/2-13	1.06	32
2 1/2	2.50	3.500	2.000	1.75	1.00	1/2-13	1.19	40
3	3.00	4.188	2.438	2.09	1.22	5/8-11	1.19	48

⚠**PROP 65 WARNING** **WARNING:** This product can expose you to chemicals including **Lead and Lead Compounds** which are known to the State of California to cause cancer and birth defects or other reproductive harm. For more information go to www.P65Warnings.ca.gov

Cap Square Flange Mounting
Style HB
(NFPA Style MF6)

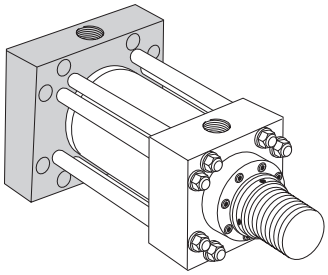

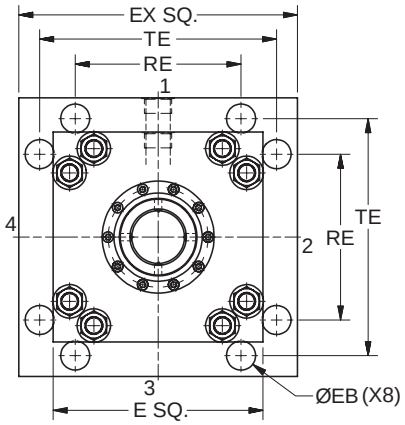

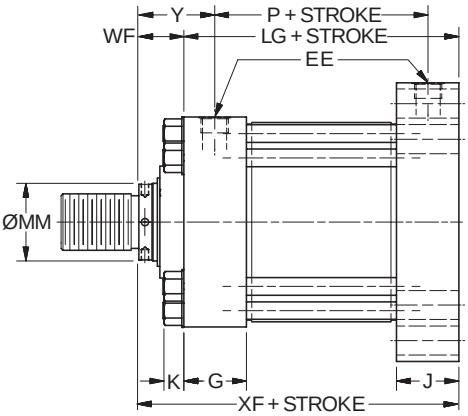

Style HB – Dimensional and Mounting Data

Bore Ø	Rod No.	MM Rod Ø	E	EB Ø	Ports (EE)			EX	G	J	K Max.	RE	TE	WF	Y	Add Stroke		
					NPTF[1]	SAE Flange Port[2]	SAE Straight Thread Port[3]									LG	P	XF
10.00	1 (std.)	4.500	12.63	1.31	2.00	2.00	24	16.63	3.69	3.69	1.17	9.89	14.13	2.94	4.75	12.13	8.50	15.06
	2	7.000	12.63	1.31	2.00	2.00	24	16.63	3.69	3.69	1.17	9.89	14.13	3.50	5.31	12.13	8.50	15.63
	3	5.000	12.63	1.31	2.00	2.00	24	16.63	3.69	3.69	1.17	9.89	14.13	3.19	5.00	12.13	8.50	15.31
	4	5.500	12.63	1.31	2.00	2.00	24	16.63	3.69	3.69	1.17	9.89	14.13	3.19	5.00	12.13	8.50	15.31
12.00	1 (std.)	5.500	14.88	1.56	2.50	2.50[4]	24	19.75	4.44	4.44	1.30	11.75	16.79	3.19	5.38	14.50	10.13	17.69
	2	8.000	14.88	1.56	2.50	2.50[4]	24	19.75	4.44	4.44	1.30	11.75	16.79	4.00	6.19	14.50	10.13	18.50
	3	7.000	14.88	1.56	2.50	2.50[4]	24	19.75	4.44	4.44	1.30	11.75	16.79	3.50	5.69	14.50	10.13	18.00
14.00	1 (std.)	7.000	17.13	1.81	2.50	2.50[4]	24	21.75	4.88	4.88	1.30	12.90	18.43	3.50	5.88	15.63	10.88	19.13
	2	10.000	17.13	1.81	2.50	2.50[4]	24	21.75	4.88	4.88	1.30	12.90	18.43	4.50	6.88	15.63	10.88	20.13
	3	8.000	17.13	1.81	2.50	2.50[4]	24	21.75	4.88	4.88	1.30	12.90	18.43	4.00	6.38	15.63	10.88	19.63
16.00	1 (std.)	8.000	19.00	1.81	-	3.00[5]	24	24.50	5.88	5.88	1.70	15.28	21.03	4.00	7.00	18.13	12.13	22.13
	3	9.000	19.00	1.81	-	3.00[5]	24	24.50	5.88	5.88	1.70	15.28	21.03	4.25	7.25	18.13	12.13	22.38
	4	10.000	19.00	1.81	-	3.00[5]	24	24.50	5.88	5.88	1.70	15.28	21.03	4.50	7.50	18.13	12.13	22.63
18.00	1 (std.)	9.000	22.00	2.06	-	3.00[5]	24	26.50	6.88	6.88	1.70	16.45	22.65	4.25	7.25	21.13	15.13	25.38
	3	10.000	22.00	2.06	-	3.00[5]	24	26.50	6.88	6.88	1.70	16.45	22.65	4.50	7.50	21.13	15.13	25.63
20.00	1 (std.)	10.000	24.00	2.06	-	3.00[5]	24	29.00	7.88	7.88	1.70	18.07	24.87	4.50	7.50	23.63	17.63	28.13

[1]NPTF ports are available at no extra charge.

[2]Optional SAE flange ports may be specified – flange to be supplied by customer. See Optional SAE Flange Port Pattern table for dimensions.

[3]SAE straight thread ports are standard and are indicated by port number.

[4] 2.50 SAE flange port is rated at 2500 psi

[5] 3.00 SAE flange port is rated at 2000 psi

Optional SAE Flange Port Pattern

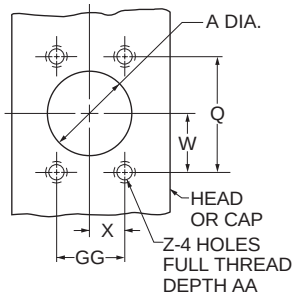

Nom. Flange Size	A	Q	GG	W	X	Z-THD UNC-2B	AA Min.	SAE
2	2.00	3.062	1.688	1.53	0.84	1/2-13	1.06	32
2 1/2	2.50	3.500	2.000	1.75	1.00	1/2-13	1.19	40
3	3.00	4.188	2.438	2.09	1.22	5/8-11	1.19	48

⚠**PROP 65 WARNING** **WARNING:** This product can expose you to chemicals including **Lead and Lead Compounds** which are known to the State of California to cause cancer and birth defects or other reproductive harm. For more information go to www.P65Warnings.ca.gov

Cap Fixed Clevis Mounting
Style BB
(NFPA Style MP1)

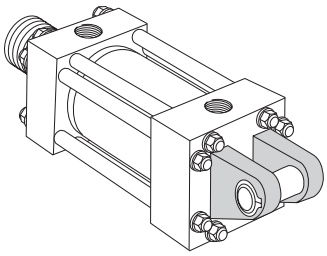

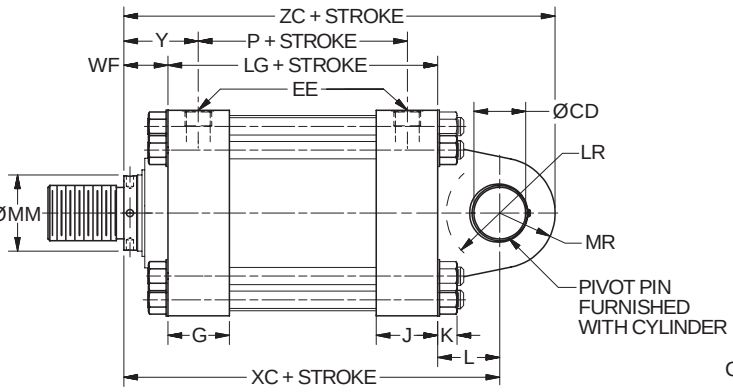

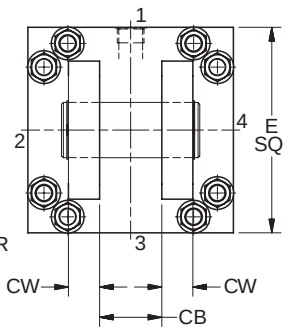

Style BB – Dimensional and Mounting Data

Bore Ø	Rod No.	MM Rod Ø	CB	CD[4] Ø +.000 -.002	CW	E	EE Ports			G	J	K Max.	L	LR	MR	WF	Y	Add Stroke			
							NPTF[1]	SAE Flange Port[2]	SAE Straight Thread Port[3]									LG	P	XC	ZC
10.00	1 (std.)	4.500	4.00	3.501	2.00	12.63	2.00	2.00	24	3.69	3.69	1.17	4.00	3.38	3.50	2.94	4.75	12.13	8.50	19.06	22.56
	2	7.000	4.00	3.501	2.00	12.63	2.00	2.00	24	3.69	3.69	1.17	4.00	3.38	3.50	3.50	5.31	12.13	8.50	19.63	23.13
	3	5.000	4.00	3.501	2.00	12.63	2.00	2.00	24	3.69	3.69	1.17	4.00	3.38	3.50	3.19	5.00	12.13	8.50	19.31	22.81
	4	5.500	4.00	3.501	2.00	12.63	2.00	2.00	24	3.69	3.69	1.17	4.00	3.38	3.50	3.19	5.00	12.13	8.50	19.31	22.81
12.00	1 (std.)	5.500	4.50	4.001	2.25	14.88	2.50	2.50[5]	24	4.44	4.44	1.30	4.50	3.88	4.00	3.19	5.38	14.50	10.13	22.19	26.19
	2	8.000	4.50	4.001	2.25	14.88	2.50	2.50[5]	24	4.44	4.44	1.30	4.50	3.88	4.00	4.00	6.19	14.50	10.13	23.00	27.00
	3	7.000	4.50	4.001	2.25	14.88	2.50	2.50[5]	24	4.44	4.44	1.30	4.50	3.88	4.00	3.50	5.69	14.50	10.13	22.50	26.50
14.00	1 (std.)	7.000	6.00	5.001	3.00	17.13	2.50	2.50[5]	24	4.88	4.88	1.30	5.75	4.19	5.00	3.50	5.88	15.63	10.88	24.88	29.88
	2	10.000	6.00	5.001	3.00	17.13	2.50	2.50[5]	24	4.88	4.88	1.30	5.75	4.19	5.00	4.50	6.88	15.63	10.88	25.88	30.88
	3	8.000	6.00	5.001	3.00	17.13	2.50	2.50[5]	24	4.88	4.88	1.30	5.75	4.19	5.00	4.00	6.38	15.63	10.88	25.38	30.38
16.00	1 (std.)	8.000	7.00	6.001	3.50	19.00	-	3.00[6]	24	5.88	5.88	1.70	7.00	6.25	6.00	4.00	7.00	18.13	12.13	29.13	35.13
	3	9.000	7.00	6.001	3.50	19.00	-	3.00[6]	24	5.88	5.88	1.70	7.00	6.25	6.00	4.25	7.25	18.13	12.13	29.38	35.38
	4	10.000	7.00	6.001	3.50	19.00	-	3.00[6]	24	5.88	5.88	1.70	7.00	6.25	6.00	4.50	7.50	18.13	12.13	29.63	35.63
18.00	1 (std.)	9.000	8.00	6.501	4.00	22.00	-	3.00[6]	24	6.88	6.88	1.70	7.63	6.75	6.50	4.25	7.25	21.13	15.13	33.00	39.50
	3	10.000	8.00	6.501	4.00	22.00	-	3.00[6]	24	6.88	6.88	1.70	7.63	6.75	6.50	4.50	7.50	21.13	15.13	33.25	39.75
20.00	1 (std.)	10.000	9.00	7.501	4.50	24.00	-	3.00[6]	24	7.88	7.88	1.70	8.75	7.75	7.50	4.50	7.50	23.63	17.63	36.88	44.38

[1]NPTF ports are available at no extra charge.
[2]Optional SAE flange ports may be specified – flange to be supplied by customer. See Optional SAE Flange Port Pattern table for dimensions.
[3]SAE straight thread ports are standard and are indicated by port number.
[4] Diameter CD is pin diameter.
[5] 2.50 SAE flange port is rated at 2500 psi
[6] 3.00 SAE flange port is rated at 2000 psi

Optional SAE Flange Port Pattern

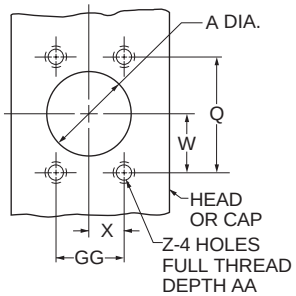

Nom. Flange Size	A	Q	GG	W	X	Z-THD UNC-2B	AA Min.	SAE
2	2.00	3.062	1.688	1.53	0.84	1/2-13	1.06	32
2 1/2	2.50	3.500	2.000	1.75	1.00	1/2-13	1.19	40
3	3.00	4.188	2.438	2.09	1.22	5/8-11	1.19	48

⚠**PROP 65 WARNING** **WARNING:** This product can expose you to chemicals including **Lead and Lead Compounds** which are known to the State of California to cause cancer and birth defects or other reproductive harm. For more information go to www.P65Warnings.ca.gov

Head Trunnion Mounting

Style D
(NFPA Style MT1)

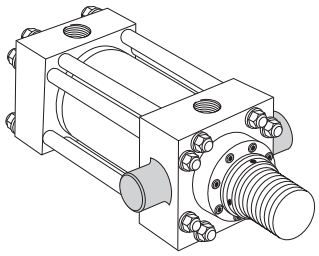

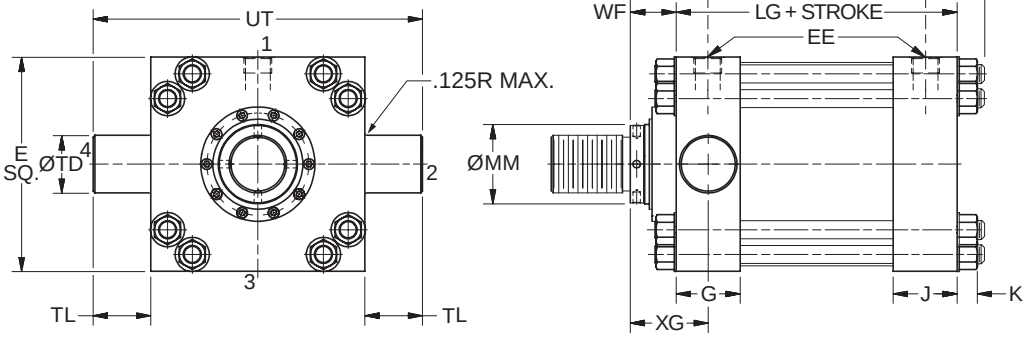

Style D – Dimensional and Mounting Data

Bore Ø	Rod No.	MM Rod Ø	E	Ports (EE)			G	J	K Max.	TD Ø +.000 -.001	TL	UT	WF	XG	Y	Add Stroke		
				NPTF[1]	SAE Flange Port[2]	SAE Straight Thread Port[3]										LG	P	ZB Max.
10.00	1 (std.)	4.500	12.63	2.00	2.00	24	3.69	3.69	1.17	3.500	3.50	19.63	2.94	4.75	4.75	12.13	8.50	16.49
	2	7.000	12.63	2.00	2.00	24	3.69	3.69	1.17	3.500	3.50	19.63	3.50	5.31	5.31	12.13	8.50	17.05
	3	5.000	12.63	2.00	2.00	24	3.69	3.69	1.17	3.500	3.50	19.63	3.19	5.00	5.00	12.13	8.50	16.74
	4	5.500	12.63	2.00	2.00	24	3.69	3.69	1.17	3.500	3.50	19.63	3.19	5.00	5.00	12.13	8.50	16.74
12.00	1 (std.)	5.500	14.88	2.50	2.50[4]	24	4.44	4.44	1.30	4.000	4.00	22.88	3.19	5.38	5.38	14.50	10.13	19.24
	2	8.000	14.88	2.50	2.50[4]	24	4.44	4.44	1.30	4.000	4.00	22.88	4.00	6.19	6.19	14.50	10.13	20.05
	3	7.000	14.88	2.50	2.50[4]	24	4.44	4.44	1.30	4.000	4.00	22.88	3.50	5.69	5.69	14.50	10.13	19.55
14.00	1 (std.)	7.000	17.13	2.50	2.50[4]	24	4.88	4.88	1.30	4.500	4.50	26.13	3.50	5.94	5.88	15.63	10.88	20.68
	2	10.000	17.13	2.50	2.50[4]	24	4.88	4.88	1.30	4.500	4.50	26.13	4.50	6.94	6.88	15.63	10.88	21.68
	3	8.000	17.13	2.50	2.50[4]	24	4.88	4.88	1.30	4.500	4.50	26.13	4.00	6.44	6.38	15.63	10.88	21.18

[1] NPTF ports are available at no extra charge.

[2] Optional SAE flange ports may be specified – flange to be supplied by customer. See Optional SAE Flange Port Pattern table for dimensions.

[3] SAE straight thread ports are standard and are indicated by port number.

[4] 2.50 SAE flange port is rated at 2500 psi

Style D – Maximum Operating Pressure

Bore Ø	psi
10.00	2800
12.00	2350
14.00	2200

Optional SAE Flange Port Pattern

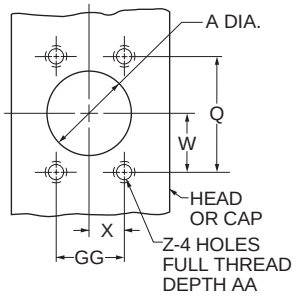

Nom. Flange Size	A	Q	GG	W	X	Z-THD UNC-2B	AA Min.	SAE
2	2.00	3.062	1.688	1.53	0.84	1/2-13	1.06	32
2 1/2	2.50	3.500	2.000	1.75	1.00	1/2-13	1.19	40

⚠**PROP 65 WARNING** **WARNING:** This product can expose you to chemicals including **Lead and Lead Compounds** which are known to the State of California to cause cancer and birth defects or other reproductive harm. For more information go to www.P65Warnings.ca.gov

Cap Trunnion Mounting

Style DB
(NFPA Style MT2)

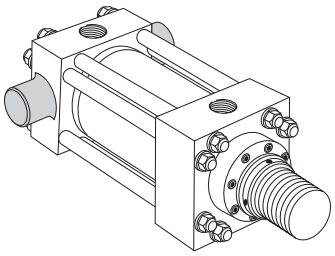

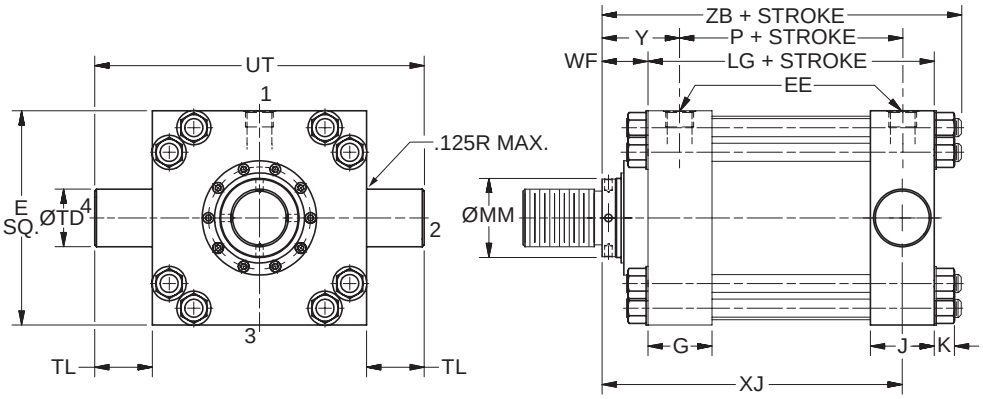

Style DB – Dimensional and Mounting Data

Bore Ø	Rod No.	MM Rod Ø	E	Ports (EE)			G	J	K Max.	TD Ø +.000 -.001	TL	UT	WF	Y	Add Stroke			
				NPTF[1]	SAE Flange Port[2]	SAE Straight Thread Port[3]									LG	P	XJ	ZB Max.
10.00	1 (std.)	4.500	12.63	2.00	2.00	24	3.69	3.69	1.17	3.500	3.50	19.63	2.94	4.75	12.13	8.50	13.38	16.49
	2	7.000	12.63	2.00	2.00	24	3.69	3.69	1.17	3.500	3.50	19.63	3.50	5.31	12.13	8.50	13.94	17.05
	3	5.000	12.63	2.00	2.00	24	3.69	3.69	1.17	3.500	3.50	19.63	3.19	5.00	12.13	8.50	13.63	16.74
	4	5.500	12.63	2.00	2.00	24	3.69	3.69	1.17	3.500	3.50	19.63	3.19	5.00	12.13	8.50	13.63	16.74
12.00	1 (std.)	5.500	14.88	2.50	2.50[4]	24	4.44	4.44	1.30	4.000	4.00	22.88	3.19	5.38	14.50	10.13	15.50	19.24
	2	8.000	14.88	2.50	2.50[4]	24	4.44	4.44	1.30	4.000	4.00	22.88	4.00	6.19	14.50	10.13	16.31	20.05
	3	7.000	14.88	2.50	2.50[4]	24	4.44	4.44	1.30	4.000	4.00	22.88	3.50	5.69	14.50	10.13	15.81	19.55
14.00	1 (std.)	7.000	17.13	2.50	2.50[4]	24	4.88	4.88	1.30	4.500	4.50	26.13	3.50	5.88	15.63	10.88	16.69	20.68
	2	10.000	17.13	2.50	2.50[4]	24	4.88	4.88	1.30	4.500	4.50	26.13	4.50	6.88	15.63	10.88	17.69	21.68
	3	8.000	17.13	2.50	2.50[4]	24	4.88	4.88	1.30	4.500	4.50	26.13	4.00	6.38	15.63	10.88	17.19	21.18

[1] NPTF ports are available at no extra charge.
[2] Optional SAE flange ports may be specified – flange to be supplied by customer. See Optional SAE Flange Port Pattern table for dimensions.
[3] SAE straight thread ports are standard and are indicated by port number.
[4] 2.50 SAE flange port is rated at 2500 psi

Optional SAE Flange Port Pattern

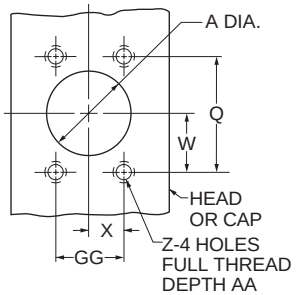

Nom. Flange Size	A	Q	GG	W	X	Z-THD UNC-2B	AA Min.	SAE
2	2.00	3.062	1.688	1.53	0.84	1/2-13	1.06	32
2 1/2	2.50	3.500	2.000	1.75	1.00	1/2-13	1.19	40

Style DB – Maximum Operating Pressure

Bore Ø	psi
10.00	2800
12.00	2350
14.00	2200

⚠ **PROP 65 WARNING** **WARNING:** This product can expose you to chemicals including **Lead and Lead Compounds** which are known to the State of California to cause cancer and birth defects or other reproductive harm. For more information go to www.P65Warnings.ca.gov

Intermediate Fixed Trunnion Mounting

Style DD
(NFPA Style MT4)

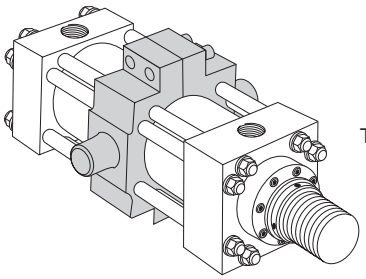

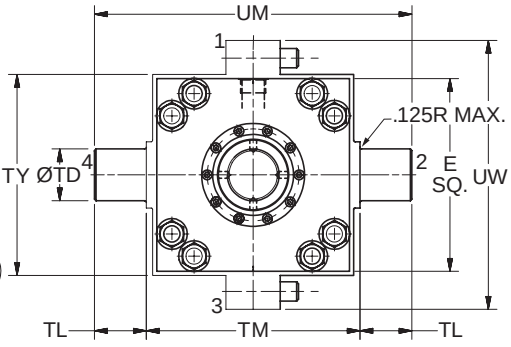

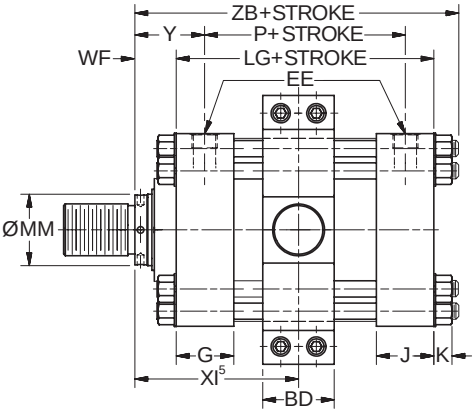

Style DD – Dimensional and Mounting Data

Bore Ø	Rod No.	MM Rod Ø	E	EE Ports			BD	G	J	K Max.	TD Ø +.000 -.001	TL	TM	TY	UM	UW	WF	Min. XI[5] Styles 4 & 9	Y	Add Stroke		
				NPTF[1]	SAE Flge. Port[2]	SAE Str. Thr. Port[3]														LG	P	ZB Max.
10.00	1(std.)	4.500	12.63	2.00	2.00	24	4.50	3.69	3.69	1.17	3.500	3.50	14.00	13.00	21.00	17.50	2.94	9.06	4.75	12.13	8.50	16.49
	2	7.000	12.63	2.00	2.00	24	4.50	3.69	3.69	1.17	3.500	3.50	14.00	13.00	21.00	17.50	3.50	9.63	5.31	12.13	8.50	17.05
	3	5.000	12.63	2.00	2.00	24	4.50	3.69	3.69	1.17	3.500	3.50	14.00	13.00	21.00	17.50	3.19	9.31	5.00	12.13	8.50	16.74
	4	5.500	12.63	2.00	2.00	24	4.50	3.69	3.69	1.17	3.500	3.50	14.00	13.00	21.00	17.50	3.19	9.31	5.00	12.13	8.50	16.74
12.00	1(std.)	5.500	14.88	2.50	2.50[6]	24	5.50	4.44	4.44	1.30	4.000	4.00	16.50	15.50	24.50	20.75	3.19	10.63	5.38	14.50	10.13	19.24
	2	8.000	14.88	2.50	2.50[6]	24	5.50	4.44	4.44	1.30	4.000	4.00	16.50	15.50	24.50	20.75	4.00	11.50	6.19	14.50	10.13	20.05
	3	7.000	14.88	2.50	2.50[6]	24	5.50	4.44	4.44	1.30	4.000	4.00	16.50	15.50	24.50	20.75	3.50	10.94	5.69	14.50	10.13	19.55
14.00	1(std.)	7.000	17.13	2.50	2.50[6]	24	5.50	4.88	4.88	1.30	4.500	4.50	19.50	19.25	28.50	24.75	3.50	11.44	5.88	15.63	10.88	20.68
	2	10.000	17.13	2.50	2.50[6]	24	5.50	4.88	4.88	1.30	4.500	4.50	19.50	19.25	28.50	24.75	4.50	12.44	6.88	15.63	10.88	21.68
	3	8.000	17.13	2.50	2.50[6]	24	5.50	4.88	4.88	1.30	4.500	4.50	19.50	19.25	28.50	24.75	4.00	11.94	6.38	15.63	10.88	21.18
16.00	1(std.)	8.000	19.00	[4]	3.00[7]	24	[4]	5.88	5.88	1.70	[4]	[4]	[4]	[4]	[4]	[4]	4.00	[4]	7.00	18.13	12.13	24.08
	3	9.000	19.00	[4]	3.00[7]	24	[4]	5.88	5.88	1.70	[4]	[4]	[4]	[4]	[4]	[4]	4.25	[4]	7.25	18.13	12.13	24.33
	4	10.000	19.00	[4]	3.00[7]	24	[4]	5.88	5.88	1.70	[4]	[4]	[4]	[4]	[4]	[4]	4.50	[4]	7.50	18.13	12.13	24.58
18.00	1(std.)	9.000	22.00	[4]	3.00[7]	24	[4]	6.88	6.88	1.70	[4]	[4]	[4]	[4]	[4]	[4]	4.25	[4]	7.25	21.13	15.13	27.33
	3	10.000	22.00	[4]	3.00[7]	24	[4]	6.88	6.88	1.70	[4]	[4]	[4]	[4]	[4]	[4]	4.50	[4]	7.50	21.13	15.13	27.58
20.00	1(std.)	10.000	24.00	[4]	3.00[7]	24	[4]	7.88	7.88	1.70	[4]	[4]	[4]	[4]	[4]	[4]	4.50	[4]	7.50	23.63	17.63	30.08

[1]NPTF ports are available at no extra charge.
[2]Optional SAE flange ports may be specified – flange to be supplied by customer. See Optional SAE Flange Port Pattern table for dimensions.
[3]SAE straight thread ports are standard and are indicated by port number.
[4]Consult Factory
[5]Dimension XI to be specified by customer. Reference point for rod end Style 55 is end of piston rod.
[6]2.50 SAE flange port is rated at 2500 psi
[7]3.00 SAE flange port is rated at 2000 psi

Optional SAE Flange Port Pattern

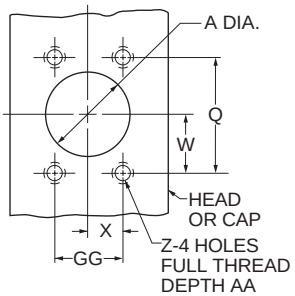

Nom. Flange Size	A	Q	GG	W	X	Z-THD UNC-2B	AA Min.	SAE
2	2.00	3.062	1.688	1.53	0.84	1/2-13	1.06	32
2 1/2	2.50	3.500	2.000	1.75	1.00	1/2-13	1.19	40
3	3.00	4.188	2.438	2.09	1.22	5/8-11	1.19	48

Style DD – Maximum Operating Pressure

Bore Ø	psi
10.00	2800
12.00	2350
14.00	2200

⚠**PROP 65 WARNING** **WARNING:** This product can expose you to chemicals including **Lead and Lead Compounds** which are known to the State of California to cause cancer and birth defects or other reproductive harm. For more information go to www.P65Warnings.ca.gov

Double Rod Cylinder
Style K

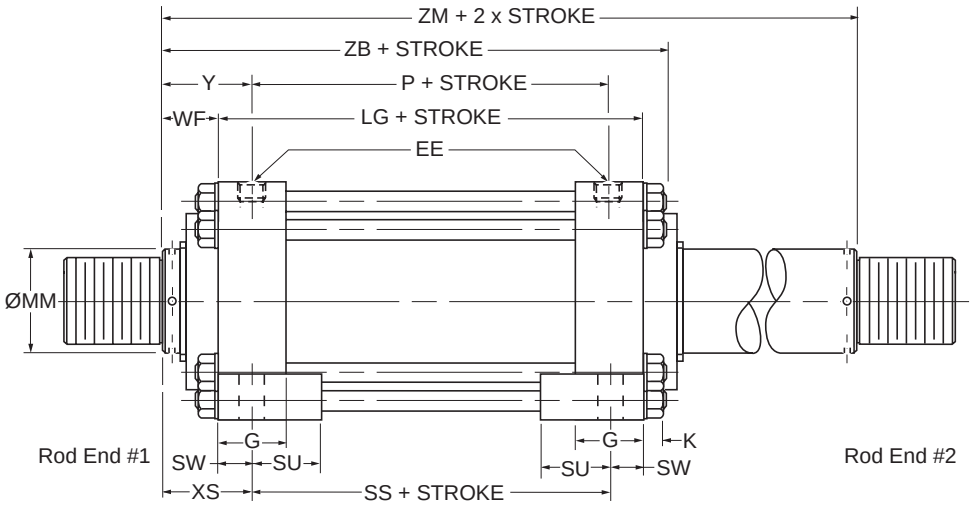

Mounting Styles for Single Rod Models	Mounting Styles for Corresponding Double Rod Models[1]	Dimension Shown on This Page Supplement Dimensions on Pages Listed Below
TB	KTB	120
TD	KTD	120
C	KC	121
JJ	KJJ	122
JB	KJB	123
D	KD	127
DD	KDD[2]	129

[1]If only one end of these Double Rod Cylinders is to be cushioned, be sure to specify clearly which end this will be.

[2]Specify XI dimension from rod end #1.

Bore Ø	Rod Code	Rod Ø	Add 2X Stroke
			ZM
10.00	1	4.500	18.00
	2	7.000	19.12
	3	5.000	18.50
	4	5.500	18.50
12.00	1	5.500	20.88
	2	8.000	22.50
	3	7.000	21.50
14.00	1	7.000	22.63
	2	10.000	24.63
	3	8.000	23.63
16.00	1	8.000	26.13
	3	9.000	26.63
	4	10.000	27.13
18.00	1	9.000	29.63
	3	10.000	30.13
20.00	1	10.000	32.63

How to Use Double Rod Cylinder Dimension Drawings

To obtain dimensioning information on a double rod cylinder, first select the desired mounting style and refer to the corresponding single rod cylinder model shown on the preceding pages. (See table above.) After you have determined all necessary dimensions from that drawing, turn back to this page and supplement those dimensions with additional ones from the drawing above and table at right. These added dimensions differ from, or are in addition to, those shown on the preceding pages and provide the additional information needed to completely dimension a double rod cylinder model.

On a double rod cylinder where the two rod ends are different, be sure to clearly state which rod end is to be assembled at which end. Port position 1 is standard. If other than standard, specify pos. 2, 3 or 4 when viewed from rod end #1 only. See port position information in Section H.

⚠**PROP 65 WARNING** **WARNING:** This product can expose you to chemicals including **Lead and Lead Compounds** which are known to the State of California to cause cancer and birth defects or other reproductive harm. For more information go to www.P65Warnings.ca.gov

Section F

Cylinder Accessories and Replacement Parts

Mounting Accessories	134-137
Style SB Spherical Bearing Mounting Accessories	138
Style SE Spherical Bearing Mounting Accessories	139
Linear Alignment Couplers	140
Split Couplers / Weld Plates / Dual Axis Knuckles	141
2H / 2HD Parts Identification and Tie Rod Torque	142
2HB Parts Identification and Flange Screw Torque	143
2H / 2HD / 2HB Rod Gland and Rod Seal Kits (Including Crown Wiper Kits), Gland Retainer Screw Torque, Piston Seal and Body Seal Kits	144-145
3H / 3HD / 3HB 7.00"-8.00" Bore Parts Identification, Rod Gland and Rod Seal Kits (Including Crown Wiper Kits), Gland Retainer Screw Torque, Piston Seal and Body Seal Kits	146-147
10.00" - 20.00" Bore Series 3H	148-149
Gland and Spanner Wrenches	150

⚠**PROP 65 WARNING** **WARNING:** This product can expose you to chemicals including **Lead and Lead Compounds** which are known to the State of California to cause cancer and birth defects or other reproductive harm. For more information go to www.P65Warnings.ca.gov

Cylinder Accessories
Parker offers a complete range of cylinder accessories to assure flexibility and versatility in present or future cylinder applications.



Rod End Accessories
Accessories offered for the rod end of the cylinder include: Rod Clevis, Eye Bracket, Knuckle, Clevis Bracket and Pivot Pin. To select the proper part number for any desired accessory, refer to Chart A below and look opposite the thread size of the rod end as indicated in the first column. The Pivot Pins, Eye Brackets and Clevis Brackets are listed opposite the thread size which their mating Knuckles or Clevises fit.

Accessory Load Capacity
The various accessories on this and the following pages have been load rated for your convenience. The load capacity shown in lbs. is the recommended maximum load for that accessory based on a 4:1 design factor in tension. (Pivot Pin is rated in shear.) Before specifying, compare the actual load or the tension (pull) force at maximum operating pressure of the cylinder with the load capacity of the accessory you plan to use. If load or pull force of cylinder exceeds load capacity of accessory, consult factory.

Chart A

Thread Size	Pin Ø	Rod Clevis		Mounting Plate or Eye Bracket		Pivot Pin	
		Part Number	Load Capacity (lb)	Forged Steel or Cast Ductile Iron		Part Number	Shear Capacity (lb)
				Part Number	Load Capacity (lb)		
5/16-24	0.312	0512210000[1]	2,600	0959810031	1,850	–	–
7/16-20	0.500	0509400000	4,250	0959810050[2]	4,620	0683680000	8,600
1/2-20	0.500	0509410000	4,900	0959810050[2]	4,620	0683680000	8,600
3/4-16	0.750	0509420000	11,200	0959810075[2]	12,370	0683690000	19,300
3/4-16	0.750	1332840000	11,200	0959810075[2]	12,370	0683690000	19,300
7/8-14	1.000	0509430000	18,800	0959810100[2]	20,450	0683700000	34,300
1-14	1.000	0509440000	19,500	0959810100[2]	20,450	0683700000	34,300
1-14	1.000	1332850000	19,500	0959810100[2]	20,450	0683700000	34,300
1 1/4-12	1.375	0509450000	33,500	0959810138	33,500	0683710000	65,000
1 1/4-12	1.375	1332860000	33,500	0959810138	33,500	0683710000	65,000
1 1/2-12	1.750	0509460000	45,600	0959810175	49,480	0683720000	105,200
1 3/4-12	2.000	0509470000	65,600	0959810200[2]	70,100	0683730000	137,400
1 7/8-12	2.000	0509480000	65,600	0959810200[2]	70,100	0683730000	137,400
2 1/4-12	2.500	0509490000	98,200	0959810250[2]	98,200	0683740000	214,700
2 1/2-12	3.000	0509500000	98,200	0959810300[2]	121,940	0683750000	309,200
2 3/4-12	3.000	0509510000	98,200	0959810300[2]	121,940	0683750000	309,200
3 1/4-12	3.500	0509520000	156,700	0959810350	187,910	0735450000	420,900
3 1/2-12	4.000	0509530000	193,200	0959810400	268,000	0735470000	565,800
4-12	4.000	0509540000	221,200	0959810400	268,000	0735470000	565,800

[1] Includes pivot pin. [2]Cylinder accessory dimensions conform to ANSI/NFPA/T3.6.8 R3-2010.

Mounting Plates
Mounting Plates for Style BB (clevis mounted) cylinders are offered. To select proper part number for your application, refer to Chart B at right.

Chart B

Series 2H, 2HD, 2HB		Series 3H, 3HD	
Mounting Plate Part Number	Bore Ø	Mounting Plate Part Number	Bore Ø
0959810050	1.50	0959810250	7.00
0959810075	2.00, 2.50	0959810300	8.00
0959810100	3.25	0959810350	10.00
0959810138	4.00	0959810400	12.00
0959810175	5.00		
0959810200	6.00		

⚠**PROP 65 WARNING** **WARNING:** This product can expose you to chemicals including **Lead and Lead Compounds** which are known to the State of California to cause cancer and birth defects or other reproductive harm. For more information go to www.P65Warnings.ca.gov

Rod Clevis Dimensions

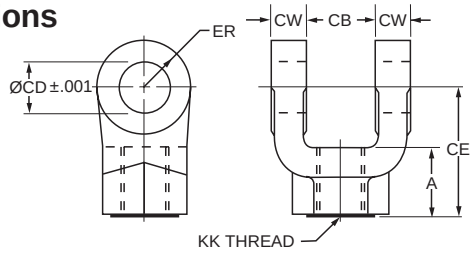

Part Number[1]	Pin Ø	A	CB	CD Ø	CE	CW	ER	KK Thread
0512210000[2]	0.310	0.81	0.34	0.314	2.25	0.20	0.30	5/16-24
0509400000	0.500	0.75	0.77	0.503	1.50	0.49	0.50	7/16-20
0509410000	0.500	0.75	0.77	0.503	1.50	0.49	0.50	1/2-20
0509420000	0.750	1.13	1.27	0.753	2.13	0.62	0.75	3/4-16
1332840000	0.750	1.13	1.27	0.753	2.38	0.62	0.75	3/4-16
0509430000	1.000	1.63	1.52	1.003	2.94	0.74	1.00	7/8-14
0509440000	1.000	1.63	1.52	1.003	2.94	0.74	1.00	1-14
1332850000	1.000	1.63	1.52	1.003	3.13	0.74	1.00	1-14
0509450000	1.375	1.88	2.04	1.378	3.75	0.99	1.38	1 1/4-12
1332860000	1.375	2.00	2.04	1.378	4.13	0.99	1.38	1 1/4-12
0509460000	1.750	2.25	2.54	1.753	4.50	1.24	1.75	1 1/2-12
0509470000	2.000	3.00	2.54	2.003	5.50	1.24	2.00	1 3/4-12
0509480000	2.000	3.00	2.54	2.003	5.50	1.24	2.00	1 7/8-12
0509490000	2.500	3.50	3.04	2.503	6.50	1.49	2.50	2 1/4-12
0509500000	3.000	3.50	3.04	3.003	6.75	1.49	2.75	2 1/2-12
0509510000	3.000	3.50	3.04	3.003	6.75	1.49	2.75	2 3/4-12
0509520000	3.500	3.50[3]	4.04	3.503	7.75	1.98	3.50	3 1/4-12
0509530000	4.000	4.00[3]	4.54	4.003	8.81	2.23	4.00	3 1/2-12
0509540000	4.000	4.00[3]	4.54	4.003	8.81	2.23	4.00	4-12

Pivot Pin Dimensions

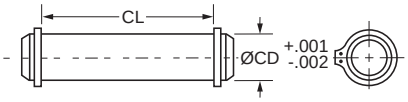

Part Number	CD Ø	CL
0683680000	0.500	1.88
0683690000	0.750	2.63
0683700000	1.000	3.13
0683710000	1.375	4.19
0683720000	1.750	5.19
0683730000	2.000	5.19
0683740000	2.500	6.19
0683750000	3.000	6.25
0735450000	3.500	8.25
0735470000[4]	4.000	9.00

[4] This size supplied with cotter pins.

1. Pivot Pins are furnished with Clevis Mounted Cylinders as standard.
2. Pivot Pins are furnished with (2) Retainer Rings.
3. Pivot Pins must be ordered as a separate item if to be used with Knuckles, Rod Clevises, or Clevis Brackets.

[1] Rod Clevises with pin diameters 0.312 thru 1.375 are forged steel. Rod Clevises with 1.750 pin diameter and larger are cast ductile iron.
[2] Includes Pivot Pin [3] Consult appropriate cylinder rod end dimensions for compatibility.

Forged Steel or Cast Ductile Iron Mounting Plate or Eye Bracket Dimensions[5]

Note: Cast ductile iron eye brackets must not be welded in place.

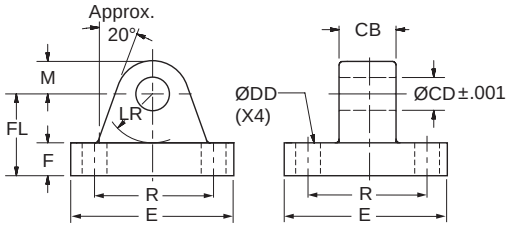

Cast or Forged[6] Part Number	Pin Ø	CB	CD Ø	DD Ø	E (As Cast)	F	FL	LR	M (As Cast)	R
0959810031	0.312	0.31	0.314	0.27	2.25	0.38	1.00	0.59	0.38	1.75
0959810050	0.500	0.75	0.503	0.41	2.50	0.38	1.13	0.69	0.50	1.63
0959810075	0.750	1.25	0.753	0.53	3.50	0.63	1.88	1.13	0.75	2.55
0959810100	1.000	1.50	1.003	0.66	4.50	0.88	2.38	1.37	1.00	3.25
0959810138	1.375	2.00	1.378	0.66	5.00	1.00[7]	3.00	1.88	1.38	3.82
0959810175	1.750	2.50	1.753	0.91	6.50	1.25[7]	3.38	2.13	1.75	4.95
0959810200	2.000	2.50	2.003	1.06	7.50	1.50	4.00	2.38	2.00	5.73
0959810250	2.500	3.00	2.503	1.19	8.50	1.75	4.75	2.88	2.50	6.58
0959810300	3.000	3.00	3.003	1.31	9.50	2.00	5.25	3.13	3.00	7.50
0959810350	3.500	4.00	3.503	1.81	12.63	2.50[8]	6.50[8]	3.88	3.50	9.62
0959810400	4.000	4.50	4.003	2.06	14.88	3.00[8]	7.50[8]	4.38	4.06	11.45

[5] When used to mate with the Rod Clevis, select by pin diameter in the table above.
[6] Eye Brackets with pin diameters 0.500 thru 1.375 are forged steel. Eye Brackets with 0.312 and 1.750 pin diameter and larger are cast ductile iron.
[7] These dimensions vary from NFPA standard. F is increased by 0.13. Sufficient LR clearance remains for full swing arc with Parker cap clevis cylinders and rod clevises.
[8] Mounting base thickness dimension F is increased on these sizes to provide greater load capacity than the former fabricated steel design. Cast ductile iron dimensions F and FL are 0.81 larger for 3.500 pin diameter and 1.06 larger for 4.000 pin diameter.

⚠PROP 65 WARNING **WARNING:** This product can expose you to chemicals including **Lead and Lead Compounds** which are known to the State of California to cause cancer and birth defects or other reproductive harm. For more information go to www.P65Warnings.ca.gov

Rod End Accessories

Accessories offered for the rod end of the cylinder include Rod Clevis, Eye Bracket, Knuckle, Clevis Bracket, and Pivot Pin. To select the proper part number for any desired accessory, refer to the table below or on the opposite page and look in the row to the right of the rod thread in the first column. For economical accessory selection, it is recommended that rod end style 4 be specified on your cylinder order.

Accessory Load Capacity

The various accessories have been load rated for your convenience. The Load Capacity in pounds is the recommended maximum load for that accessory based on a 4:1 design factor in tension. (Pivot Pin is rated in shear.) Before specifying, compare the actual load or the tension (pull) force at the maximum operating pressure of the cylinder with the load capacity of the accessory you plan to use. If load or pull force of cylinder exceeds load capacity of accessory, consult factory.

Thread Size	Pin Ø	Knuckle		Clevis Bracket				Pivot Pin	
		Part Number	Load Capacity (lb)	Forged Steel or Cast Ductile Iron		Fabricated Steel		Part Number	Shear Capacity (lb)
				Part Number	Load Capacity (lb)	Part Number	Load Capacity (lb)		
5/16-24	0.438	0740750000	3,300	0960160044	2,830	0740760000	3,600	0740780000	6,600
7/16-20	0.500	0690890000	5,000	0960160050	7,740	0692050000	7,300	0683680000	8,600
1/2-20	0.500	0690900000	5,700	0960160050	7,740	0692050000	7,300	0683680000	8,600
3/4-16	0.750	0690910000	12,100	0960160075	13,600	0692060000	10,880	0683690000	19,300
7/8-14	1.000	0690920000	13,000	0960160100	23,000	0692070000	15,180	0683700000	34,300
1-14	1.000	0690930000	21,700	0960160100	23,000	0692070000	15,180	0683700000	34,300
1 1/4-12	1.375	0690940000	33,500	0960160138	39,500	0692080000	23,560	0683710000	65,000
1 1/2-12	1.750	0690950000	45,000	0960160175	49,480	0692090000	21,520	0683720000	105,200
1 3/4-12	2.000	0690960000	53,500	0960160200	72,400	0692100000	26,000	0692150000	137,400
1 7/8-12	2.000	0962160000	75,000	0960160200	72,400	0692100000	26,000	0692150000	137,400
2 1/4-12	2.500	0962170000	98,700	0960160250	98,700	0692110000	28,710	0683740000	214,700
2 1/2-12	3.000	0962180000	110,000	0960160300	123,300	0692120000	28,190	0683750000	309,200
2 3/4-12	3.000	0962190000	123,300	N/A	N/A	0692130000	31,390	0692160000	309,200
3 1/4-12	3.500	0962200000	161,300	0960160350	200,400	0735420000	80,250	0735450000	420,900
3 1/2-12	3.500	0962210000	217,300	0960160350	200,400	0735420000	80,250	0735450000	420,900
4-12	4.000	0962220000	273,800	0960160400	292,100	0735430000	98,420	0821810000	565,800
N/A	4.000	N/A	N/A	N/A	N/A	N/A	N/A	0735470000[1]	565,800

[1] This size supplied with cotter pins.

Forged Steel or Cast Ductile Iron Clevis Bracket Dimensions

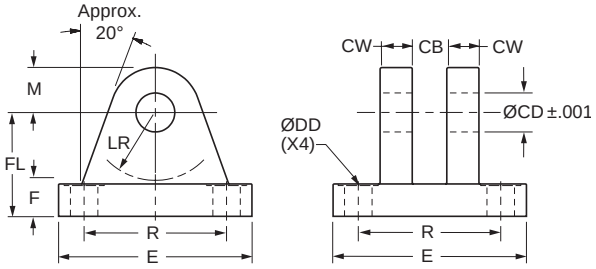

Note: Cast ductile iron clevis brackets must not be welded in place.

Cast or Forged[2] Part Number	Pin Ø	CB	CD Ø	CW	DD Ø	E (As Cast)	F	FL	LR	M (As Cast)	R
0960160044	0.438	0.46	0.440	0.37	0.27	2.25	0.38	1.00	0.56	0.44	1.75
0960160050	0.500	0.78	0.503	0.50	0.41	2.50	0.38	1.13	0.63	0.56	1.63
0960160075	0.750	1.28	0.753	0.63	0.53	3.50	0.63	1.88	1.06	0.75	2.56
0960160100	1.000	1.53	1.003	0.75	0.66	4.50	0.75	2.25	1.25	1.00	3.25
0960160138	1.375	2.03	1.378	1.00	0.66	5.00	0.88	3.00	1.94	1.38	3.81
0960160175	1.750	2.53	1.753	1.25	0.91	6.50	0.94	3.13	2.00	1.75	4.94
0960160200	2.000	2.53	2.003	1.25	1.06	7.50	1.38	3.75	2.25	2.00	5.75
0960160250	2.500	3.03	2.503	1.50	1.19	8.50	1.50	4.50	2.81	2.50	6.59
0960160300	3.000	3.03	3.003	1.50	1.31	9.50	1.88	5.38	3.31	3.00	7.50
0960160350	3.500	4.03	3.503	2.00	1.81	12.63	2.31	6.38	3.88	3.50	9.62
0960160400	4.000	4.53	4.003	2.25	2.06	14.88	2.88	7.50	4.50	4.00	11.50

[2] Clevis Brackets with pin diameters 0.500 thru 1.375 are forged steel. Clevis Brackets with 0.438 and 1.750 pin diameter and larger are cast ductile iron.

⚠PROP 65 WARNING **WARNING:** This product can expose you to chemicals including **Lead and Lead Compounds** which are known to the State of California to cause cancer and birth defects or other reproductive harm. For more information go to www.P65Warnings.ca.gov

Knuckle Dimensions

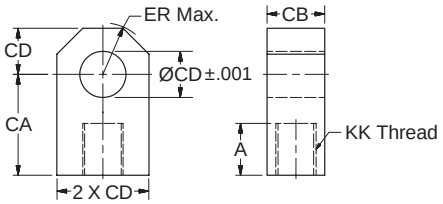

Thread Size thru 1 3/4-12

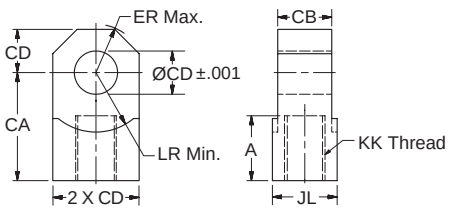

Thread Size 1 7/8-12 & Larger

Part Number	Pin Ø	A	CA	CB	CD Ø	ER	JL	LR min	KK Thread
0740750000	0.438	0.75	1.50	0.43	0.440	0.53	–	–	5/16-24
0690890000	0.500	0.75	1.50	0.75	0.503	0.59	–	–	7/16-20
0690900000	0.500	0.75	1.50	0.75	0.503	0.59	–	–	1/2-20
0690910000	0.750	1.13	2.06	1.25	0.753	0.87	–	–	3/4-16
0690920000	1.000	1.13	2.38	1.50	1.003	1.15	–	–	7/8-14
0690930000	1.000	1.63	2.81	1.50	1.003	1.15	–	–	1-14
0690940000	1.375	2.00	3.44	2.00	1.378	1.55	–	–	1 1/4-12
0690950000	1.750	2.25	4.00	2.50	1.753	1.96	–	–	1 1/2-12
0690960000	2.000	2.25	4.38	2.50	2.003	2.24	–	–	1 3/4-12
0962160000	2.000	3.00	5.00	2.50	2.003	2.24	3.00	2.77	1 7/8-12
0962170000	2.500	3.50	5.81	3.00	2.503	2.76	3.50	3.09	2 1/4-12
0962180000	3.000	3.50	6.13	3.00	3.003	3.30	4.00	3.58	2 1/2-12
0962190000	3.000	3.63	6.50	3.50	3.003	3.30	4.00	3.58	2 3/4-12
0962200000	3.500	4.50	7.63	4.00	3.503	3.87	6.00	4.18	3 1/4-12
0962210000	3.500	5.00	7.63	4.00	3.503	3.87	6.00	4.18	3 1/2-12
0962220000	4.000	5.50	9.13	4.50	4.003	4.43	6.00	4.80	4-12

Pivot Pin Dimensions

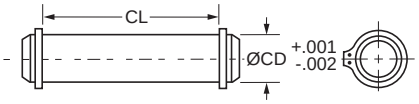

Part Number	CD Ø	CL
0740780000	0.438	1.31
0683680000	0.500	1.88
0683690000	0.750	2.63
0683700000	1.000	3.13
0683710000	1.375	4.19
0683720000	1.750	5.19
0692150000	2.000	5.69
0683740000	2.500	6.19
0683750000	3.000	6.25
0692160000	3.000	6.75
0735450000	3.500	8.25
0821810000	4.000	8.69
0735470000[1]	4.000	9.00

[1]This size supplied with cotter pins.

1. Pivot Pins are furnished with Clevis Mounted Cylinders as standard.
2. Pivot Pins are furnished with (2) Retainer Rings.
3. Pivot Pins must be ordered as a separate item if to be used with Knuckles, Rod Clevises, or Clevis Brackets.

Fabricated Steel Clevis Bracket Dimensions

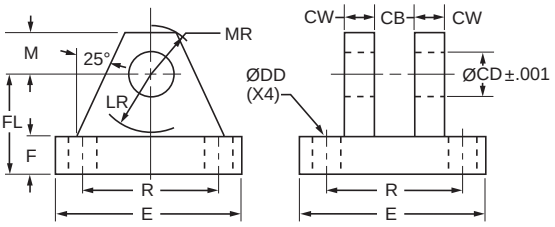

Fabricated Steel Part Number	Pin[2] Ø	CB	CD Ø	CW	DD Ø	E	F	FL	LR	M	MR	R
0692050000	0.500	0.80	0.503	0.50	0.41	3.50	0.50	1.50	0.75	0.50	0.63	2.55
0692060000	0.750	1.30	0.753	0.63	0.53	5.00	0.63	1.88	1.19	0.75	0.91	3.82
0692070000	1.000	1.59	1.003	0.75	0.66	6.50	0.75	2.25	1.50	1.00	1.25	4.95
0692080000	1.375	2.09	1.378	1.00	0.66	7.50	0.88	3.00	2.00	1.38	1.66	5.73
0692090000	1.750	2.59	1.753	1.25	0.91	9.50	0.88	3.63	2.75	1.75	2.22	7.50
0692100000	2.000	2.59	2.003	1.50	1.06	12.75	1.00	4.25	3.19	2.25	2.78	9.40
0692110000	2.500	3.09	2.503	1.50	1.19	12.75	1.00	4.50	3.50	2.50	3.13	9.40
0692120000	3.000	3.09	3.003	1.50	1.31	12.75	1.00	6.00	4.25	3.00	3.59	9.40
0692130000	3.000	3.59	3.003	1.50	1.31	12.75	1.00	6.00	4.25	3.00	3.59	9.40
0735420000	3.500	4.09	3.503	2.00	1.81	15.50	1.69	6.69	5.00	3.50	4.13	12.00
0735430000	4.000	4.59	4.003	2.00	2.06	17.50	1.94	7.69	5.75	4.00	4.88	13.75

[2] Clevis Bracket for 0.438 diameter pin is only available in cast ductile iron construction. See part number 0960160044 on previous page.

⚠PROP 65 WARNING **WARNING:** This product can expose you to chemicals including **Lead and Lead Compounds** which are known to the State of California to cause cancer and birth defects or other reproductive harm. For more information go to www.P65Warnings.ca.gov

Parker offers a complete range of Cylinder Accessories to assure you of the greatest versatility in present or future cylinder applications. Accessories offered for spherical bearing mount cylinders include the Rod Eye, Pivot Pin and Clevis Bracket. To select the proper part number for any desired accessory refer to the tables below.

Spherical Rod Eye Dimensions

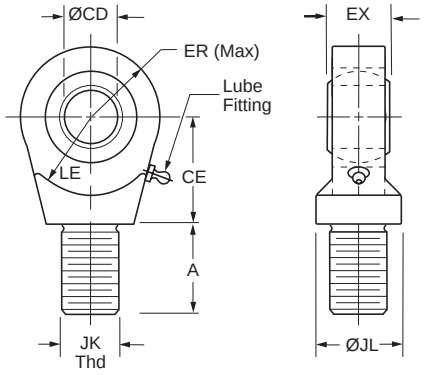

Bore Ø	Part Number	CD Ø	A	CE	EX	ER	LE	JK Thread	JL Ø	Load Capacity (lb)
1.50	0961000050	.5000-0005	0.72	0.86	0.44	0.80	0.78	7/16-20	0.88	2,644
2.00 & 2.50	0961000075	.7500-0005	1.02	1.25	0.66	1.14	1.06	3/4-16	1.31	9,441
3.25	0961000100	1.0000-0005	1.52	1.88	0.88	1.34	1.45	1-14	1.50	16,860
4.00	0961000138	1.3750-0005	2.02	2.13	1.19	1.67	1.91	1 1/4-12	2.00	28,562
5.00	0961000175	1.7500-0005	2.14	2.50	1.53	2.05	2.16	1 1/2-12	2.00	43,005
6.00	0961000200	2.0000-0005	2.89	2.75	1.75	2.60	2.50	1 7/8-12	2.75	70,193

Order to fit Piston Rod Thread Size.

Pivot Pin Dimensions

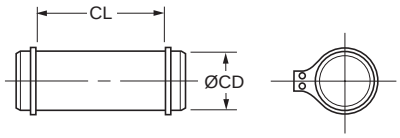

Bore Ø	Part Number	CD Ø	CL	Shear Capacity (lb)
1.50	0839620000	.4997-0004	1.56	8,600
2.00 & 2.50	0839630000	.7497-0005	2.03	19,300
3.25	0839640000	.9997-0005	2.50	34,300
4.00	0839650000	1.3746-0006	3.31	65,000
5.00	0839660000	1.7496-0006	4.22	105,200
6.00	0839670000	1.9996-0007	4.94	137,400

Pivot Pins are furnished with (2) Retainer Rings.

Clevis Bracket Dimensions

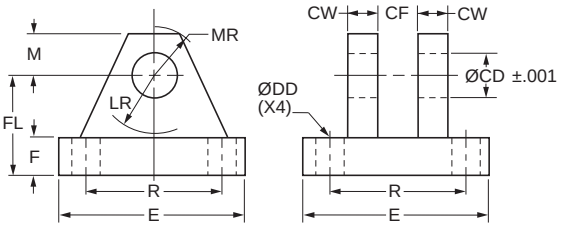

Fabricated Steel

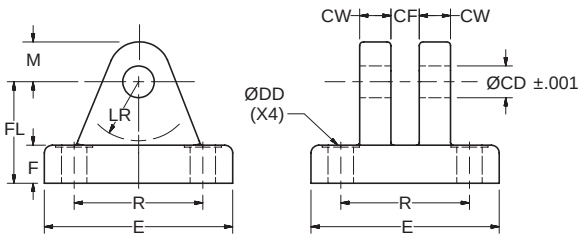

Cast Ductile Iron

Order to fit Cylinder Cap or Rod Eye.

Bore Ø	Pin Ø	Cast Ductile Iron Part Number	Fabricated Steel Part Number	CD Ø	CF	CW	DD Ø	E	F	FL	LR	M	MR	R	Load Capacity (lb)
1.50	0.500	0959450000	0839470000	0.503	0.45	0.50	0.41	3.00	0.50	1.50	0.94	0.50	0.63	2.05	5,770
2.00 & 2.50	0.750	0959300000	0839480000	0.753	0.67	0.63	0.53	3.75	0.63	2.00	1.38	0.88	1.00	2.76	9,450
3.25	1.000	0959310000	0839490000	1.003	0.89	0.75	0.53	5.50	0.75	2.50	1.69	1.00	1.19	4.10	14,300
4.00	1.375	0959320000	0839500000	1.378	1.20	1 .00	0.66	6.50	0.88	3.50	2.44	1.38	1.63	4.95	20,322
5.00	1.750	0959330000	0839510000	1.753	1.55	1.25	0.91	8.50	1.25	4.50	2.88	1.75	2.06	6.58	37,800
6.00	2.000	0959340000	0839520000	2.003	1.77	1.50	0.91	10.63	1.50	5.00	3.00	2.00	2.38	7.92	50,375

⚠PROP 65 WARNING **WARNING:** This product can expose you to chemicals including **Lead and Lead Compounds** which are known to the State of California to cause cancer and birth defects or other reproductive harm. For more information go to www.P65Warnings.ca.gov

Parker offers a complete range of Cylinder Accessories to assure you of the greatest versatility in present or future cylinder applications. Accessories offered for spherical bearing mount cylinders include the Rod Eye, Pivot Pin and Clevis Bracket. To select the proper part number for any desired accessory refer to the tables below.

Spherical Rod Eye Dimensions

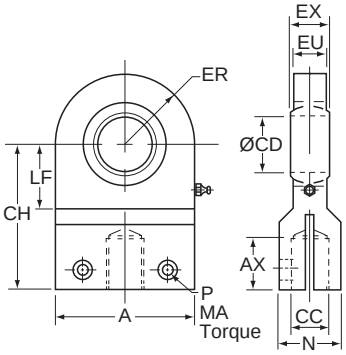

Bore Ø	Part Number	A	AX (min.)	CH	CD Ø	ER	EU	EX	CC Thread	LF	MA (lb-ft)	N	P (SHCS)	Load Cap. (lb)
1.50	0978200075	1.75	0.75	1.75	0.7500 -0.0004	0.88	0.56	0.656	1/2-20	0.94	11	0.88	1/4-28	5,301
2.00	0978200100	2.50	1.13	2.50	1.0000 -0.0004	1.25	0.75	0.875	7/8-14	1.19	40	1.25	3/8-24	9,425
2.50	0978200125	3.00	1.13	2.75	1.2500 -0.0005	1.50	0.94	1.093	7/8-14	1.44	40	1.38	3/8-24	14,726
3.25	0978200150	4.00	1.63	3.75	1.5000 -0.0005	2.00	1.13	1.312	1 1/4-12	1.75	100	2.00	1/2-20	24,887
4.00	0978200200	4.50	2.00	4.50	2.0000 -0.0005	2.25	1.50	1.750	1 1/2-12	2.25	185	2.50	5/8-18	37,699
5.00	0978200250	6.00	2.25	5.25	2.5000 -0.0006	3.00	1.88	2.187	1 3/4-12	2.81	325	2.75	3/4-16	58,905
6.00	0978200300	7.00	3.00	6.75	3.0000 -0.0006	3.50	2.25	2.625	2 1/4-12	3.31	525	3.50	7/8-14	84,823
7.00	0978200350	8.00	3.50	8.00	3.5000 -0.0008	4.00	2.63	3.062	2 3/4-12	3.94	800	4.50	1-14	115,454
8.00	0978200400	9.00	3.50	8.50	4.0000 -0.0008	4.50	3.00	3.500	3 1/4-12	4.50	800	5.00	1-14	150,796

Order to fit Piston Rod Thread Size.

Pivot Pin Dimensions

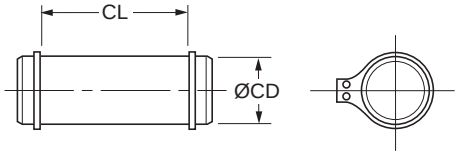

Pivot Pins are furnished with (2) Retainer Rings.

Bore Ø	Pin Ø	Part Number	CD Ø	CL	Shear Capacity (lb)
1.50	0.750	0977260075	0.7497 -0.0005	1.78	19,300
2.00	1.000	0977260100	0.9997 -0.0005	2.00	34,300
2.50	1.250	0977260125	1.2496 -0.0006	2.50	53,600
3.25	1.500	0977260150	1.4996 -0.0006	3.00	77,300
4.00	2.000	0977260200	1.9996 -0.0007	3.94	137,400
5.00	2.500	0977260250	2.4996 -0.0007	4.88	214,700
6.00	3.000	0977260300	2.9996 -0.0007	5.31	309,100
7.00	3.500	0977260350	3.4995 -0.0009	6.25	420,700
8.00	4.000	0977260400	3.9995 -0.0009	6.69	549,400

Forged Steel or Cast Ductile Iron Clevis Bracket Dimensions[1]

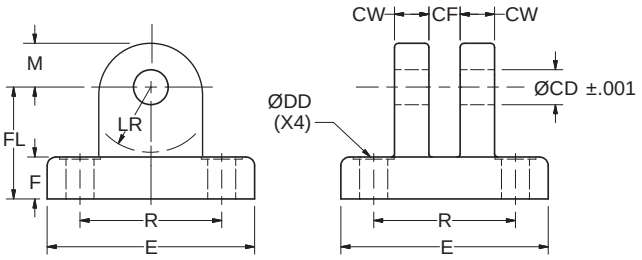

Order to fit Cylinder Cap or Rod Eye.

Bore Ø	Pin Ø	Part Number	CD Ø ±0.001	CF	CW	DD Ø	E	F	FL	LR	M	R	Load Capacity (lb)
1.50	0.750	0977270075	0.753	0.67	0.50	0.41	2.75	0.38	1.63	1.06	0.63	2.00	5,301
2.00	1.000	0977270100	1.003	0.89	0.50	0.47	3.25	0.50	2.00	1.31	0.81	2.44	9,425
2.50	1.250	0977270125	1.253	1.11	0.63	0.53	4.00	0.75	2.50	1.56	1.00	3.00	14,726
3.25	1.500	0977270150	1.503	1.33	0.75	0.66	5.00	0.75	3.00	2.06	1.25	3.75	24,887
4.00	2.000	0977270200	2.003	1.77	1.00	0.66	5.50	1.00	3.50	2.31	1.63	4.31	37,699
5.00	2.500	0977270250	2.503	2.20	1.25	0.91	7.00	1.25	4.50	3.06	2.00	5.44	58,905
6.00	3.000	0977270300	3.003	2.64	1.25	1.06	8.25	1.50	5.25	3.56	2.50	6.38	84,823
7.00	3.500	0977270350	3.503	3.08	1.50	1.19	9.25	1.75	6.00	4.06	3.00	7.38	115,454
8.00	4.000	0977270400	4.003	3.52	1.50	1.31	10.50	2.00	6.75	4.56	3.50	8.50	150,796

[1] Clevis Brackets with pin diameters 0.750 thru 2.000 are forged steel. Clevis Brackets with 2.500 pin diameter and larger are cast ductile iron.

⚠PROP 65 WARNING **WARNING:** This product can expose you to chemicals including **Lead and Lead Compounds** which are known to the State of California to cause cancer and birth defects or other reproductive harm. For more information go to www.P65Warnings.ca.gov

Linear Alignment Couplers are available in 19 standard thread sizes...



Cost Saving Features and Benefits Include

- Maximum reliability for trouble-free operation, long life and lower operating costs
- Increased cylinder life by reducing wear on Piston and Rod bearings
- Simplifying Cylinder installation and reducing assembly costs
- Increase Rod Bearing and Rod Seal life for lower maintenance costs

Alignment Coupler

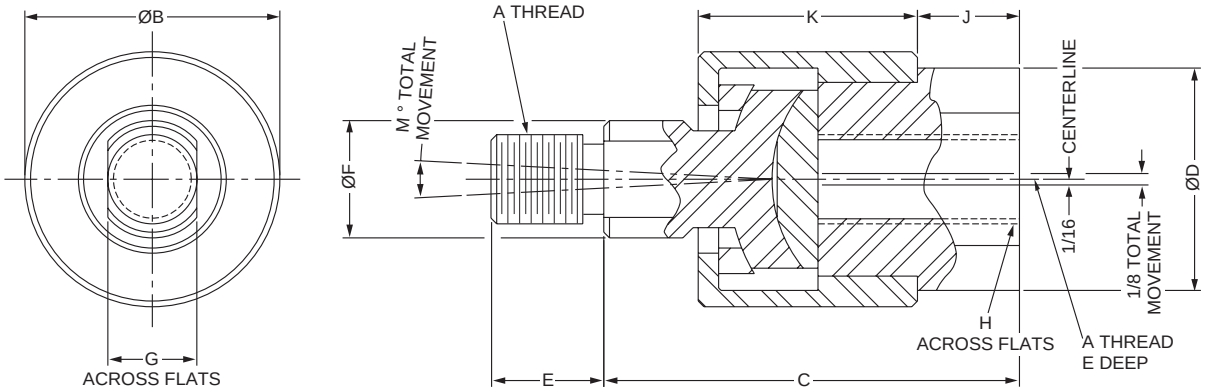

Part Numbers and Dimensions

Part Number	A	B Ø	C	D Ø	E	F Ø	G	H	J	K	M	Max. Pull Load (lb)	Max. Approx. Weight (lb)
1347570031	5/16-24	1.13	1.75	0.94	0.50	0.50	0.38	0.75	0.38	0.94	6°	1,200	.35
1347570038	3/8-24	1.13	1.75	0.94	0.50	0.50	0.38	0.75	0.38	0.94	6°	2,425	.35
1347570044	7/16-20	1.38	2.00	1.13	0.75	0.63	0.50	0.88	0.38	1.09	6°	3,250	.55
1347570050	1/2-20	1.38	2.00	1.13	0.75	0.63	0.50	0.88	0.38	1.09	6°	4,450	.55
1347570063	5/8-18	1.38	2.00	1.13	0.75	0.63	0.50	0.88	0.38	1.09	6°	6,800	.55
1347570075	3/4-16	2.00	2.31	1.63	1.13	0.94	0.75	1.31	0.44	1.28	6°	9,050	1.4
1347570088	7/8-14	2.00	2.31	1.63	1.13	0.94	0.75	1.31	0.44	1.28	6°	14,450	1.4
1347570100	1-14	3.13	3.00	2.38	1.63	1.44	1.25	1.88	0.75	1.78	6°	19,425	4.8
1347570125	1 1/4-12	3.13	3.00	2.38	1.63	1.44	1.25	1.88	0.75	1.78	6°	30,500	4.8
1337390125	1 1/4-12	3.50	4.00	2.00	2.00	1.50	1.25	1.69	0.75	2.50	10°	30,500	6.9
1337390150	1 1/2-12	4.00	4.38	2.25	2.25	1.75	1.50	1.94	0.88	2.75	10°	45,750	9.8
1337390175	1 3/4-12	4.00	4.38	2.25	2.25	1.75	1.50	1.94	0.88	2.75	10°	58,350	9.8
1337390188	1 7/8-12	5.00	5.63	3.00	3.00	2.25	2.00	2.63	1.38	3.38	10°	67,550	19.8
1337390200	2-12	5.00	5.63	3.00	3.00	2.25	2.00	2.63	1.38	3.38	10°	77,450	19.8
1337390225	2 1/4-12	6.75	6.38	3.25	3.50	2.75	2.38	2.88	1.63	3.75	10°	99,250	35.3
1337390250	2 1/2-12	7.00	6.50	4.00	3.50	3.25	2.88	3.38	1.63	3.88	10°	123,750	45.3
1337390275	2 3/4-12	7.00	6.50	4.00	3.50	3.25	2.88	3.38	1.63	3.88	10°	150,950	45.3
1337390300	3-12	7.00	6.50	4.00	3.50	3.25	2.88	3.38	1.63	3.88	10°	180,850	45.3
1337390325	3 1/4-12	9.25	8.50	5.25	4.50	4.00	3.38	4.50	2.00	5.50	10°	213,450	–
1337390425	4 1/4-12	12.88	11.25	7.75	4.50	5.50	4.88	7.00	1.50	8.75	10°	370,850	–

How to Order Linear Alignment Couplers — When ordering a cylinder with a threaded male rod end, specify the coupler of equal thread size by part number as listed in Table 1, i.e.; Piston Rod “KK” or “CC” dimension is 3/4" - 16", specify coupler part number 1347570075.

⚠PROP 65 WARNING **WARNING:** This product can expose you to chemicals including **Lead and Lead Compounds** which are known to the State of California to cause cancer and birth defects or other reproductive harm. For more information go to www.P65Warnings.ca.gov

Split Couplers and Weld Plates
for Parker "Style 55" Piston Rod End

Rod Ø	A Ø	B Ø	C	D	E Ø	F	Bolt Size	Bolt Circle	Split Coupler Part Number	Weld Plate Part Number
0.625	1.50	2.00	0.50	0.56	0.25	4	#10-24 x .94 LG	1.125	1472340062	1481740062
1.000	2.00	2.50	0.50	0.88	0.25	6	.250-20 x 1.25 LG	1.500	1472340100	1481740100
1.375	2.50	3.00	0.63	1.00	0.25	6	.312-18 x 1.50 LG	2.000	1472340138	1481740138
1.750	3.00	4.00	0.63	1.25	0.25	8	.312-18 x 1.75 LG	2.375	1472340175	1481740175
2.000	3.50	4.00	0.75	1.63	0.38	12	.375-16 x 2.25 LG	2.687	1472340200	1481740200
2.500	4.00	4.50	0.75	1.88	0.38	12	.375-16 x 2.50 LG	3.187	1472340250	1481740250
3.000	5.00	5.50	1.00	2.38	0.38	12	.500-13 x 3.25 LG	4.000	1472340300	1481740300
3.500	5.88	7.00	1.00	2.63	0.38	12	.625-11 x 3.50 LG	4.687	1472340350	1481740350
4.000	6.38	7.00	1.00	2.63	0.38	12	.625-11 x 3.50 LG	5.187	1472340400	1481740400
4.500	6.88	8.00	1.00	3.13	0.38	12	.625-11 x 4.00 LG	5.687	1472340450	1481740450
5.000	7.38	8.00	1.00	3.13	0.38	12	.625-11 x 4.00 LG	6.187	1472340500	1481740500
5.500	8.25	9.00	1.25	3.88	0.38	12	.750-10 x 5.00 LG	6.875	1472340550	1481740550
7.000	10.38	11.00	1.75	4.00	0.50	12	1.00-8 x 5.50 LG	8.750	1472340700	1481740700
8.000	11.38	12.00	2.00	4.00	0.50	16	1.00-8 x 5.50 LG	9.750	1472340800	1481740800
9.000	13.12	14.00	2.25	4.00	0.50	12	1.25-7 x 6.00 LG	11.125	1472340900	1481740900
10.000	14.12	15.00	2.50	4.50	0.50	16	1.25-7 x 6.50 LG	12.125	1472341000	1481741000

Note: Bolts are not included with split coupler or weld plate.

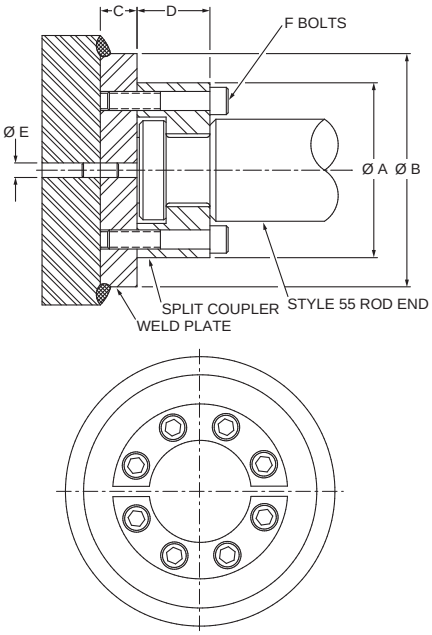

⚠WARNING: Piston rod separation from the machine member can result in severe personal injury or even death to nearby personnel. The cylinder user must make sure the weld holding the weld plate to the machine is of sufficient quality and size to hold the intended load. The cylinder user must also make sure the bolts holding split coupler to the weld plate are of sufficient strength to hold the intended load and installed in such a way that they will not become loose during the machine's operation.

Dual Axis Knuckles

Using a Dual Axis Knuckle permits increased angular movement from the cylinder center line. Clevis or Eye mounted cylinders often require movement beyond the plane that two pivot pins allow. Spherical bearing mounts permit angular movement up to 4.5° within the pivoting plane. A Dual Axis Knuckle, with two pin holes 90° apart, installed at the cap and rod end of a mounting style BB cylinder adds two pivot points, thereby providing up to 30° movement in another plane at each end.

Maximum Achievable Angular Movement from Cylinder Centerline[1]

Inboard Pin - 15° maximum movement for cylinder misalignment only.

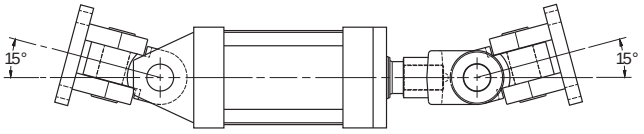

Outboard Pin - 30° maximum movement when applying force to a load moving in a curved plane.

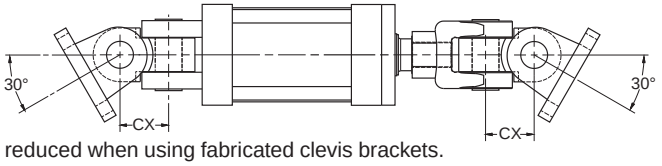

[1] Maximum movement is achieved with cast clevis brackets. Movement is reduced when using fabricated clevis brackets.

Dual Axis Knuckle Dimensions and Usage

Part Number	Pin Ø	Load Cap. (lb)	CB	CD Ø	CX	LE	LR	MR	Mating Parts		BB Mount Usage by Series & Bore
									Clevis Bracket	Rod Clevis	2H, 2HD, 2HB
0952670000	0.500	4,380	0.75	0.503	0.88	0.54	0.63	0.50	0960160050	0509400000, 0509410000	1.50
0952680000	0.750	12,370	1.25	0.753	1.19	0.80	0.94	0.75	0960160075	0509420000, 1332840000	2.00, 2.50
0952690000	1.000	20,500	1.50	1.003	1.69	1.05	1.22	1.00	0960160100	0509430000, 0509440000, 1332850000	3.25
0952700000	1.375	30,500	2.00	1.378	2.38	1.44	1.69	1.38	0960160138	0509450000, 1332860000	4.00
0952710000	1.750	49,500	2.50	1.753	3.06	1.81	2.19	1.75	0960160175	0509460000	5.00
0952720000	2.000	68,000	2.50	2.003	3.63	2.09	2.44	2.00	0960160200	0509470000, 0509480000	6.00

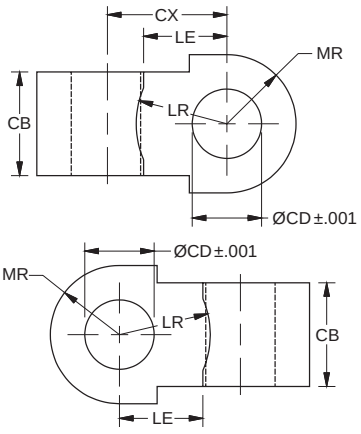

⚠PROP 65 WARNING **WARNING:** This product can expose you to chemicals including **Lead and Lead Compounds** which are known to the State of California to cause cancer and birth defects or other reproductive harm. For more information go to www.P65Warnings.ca.gov

Parker Hannifin Corporation
Cylinder Division
Des Plaines, Illinois USA

1.50" - 6.00" Bore Series 2H

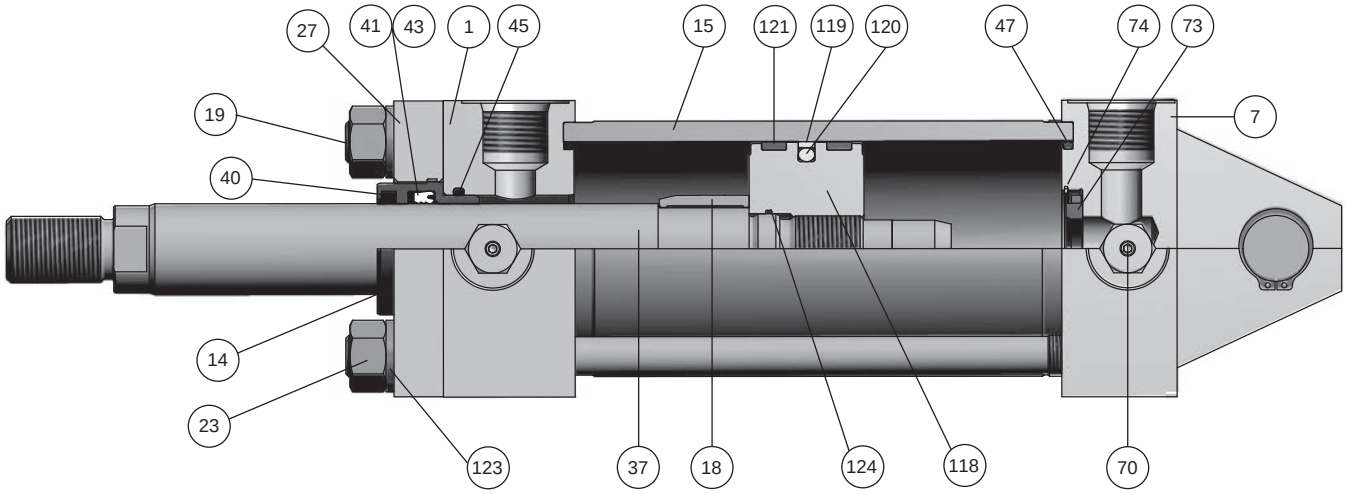

1.50" - 6.00" Bore Series 2HD

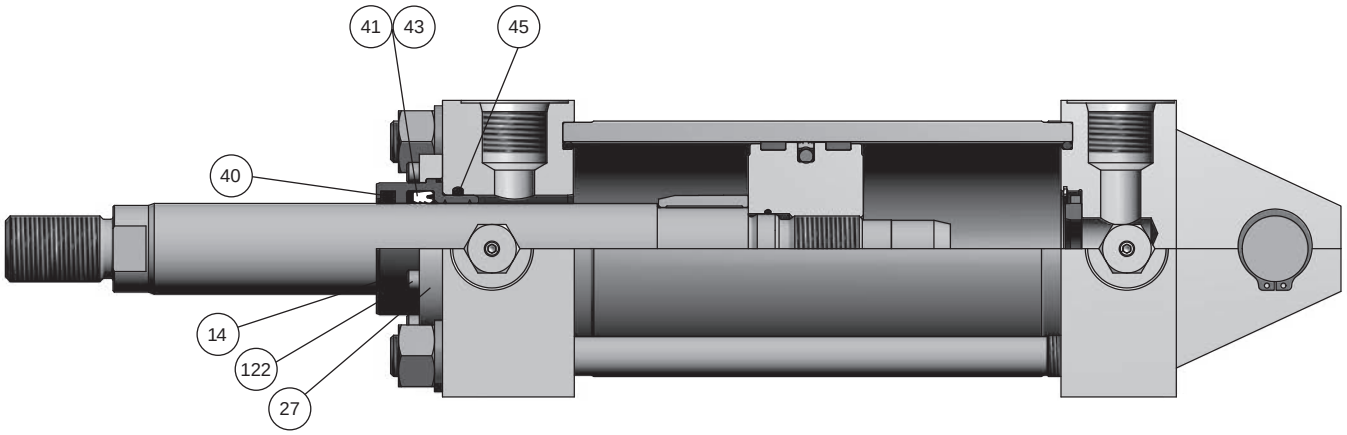

Piston and Rod Assemblies

Factory assembled piston and rod assemblies (that include seals for piston type specified) are recommended.

Parts List — 1.50" through 6.00" Bore

Symbol	Description
1	Head
7	Cap
14	Rod Gland
15	Cylinder Body
18	Cushion Sleeve, head end cushion
19	Tie Rod
23	Tie Rod Nut
27	Retainer
37	Piston Rod, single rod type
40	Rod Wiper
41	Rod Seal
43	Back-up Washer, rod seal

Symbol	Description
45	Gland O-Ring
47	O-Ring, cylinder tube to head and cap seal
70	Needle Valve, cushion adjustment cartridge
73	Bushing, float check, cushion on cap end
74	Retaining Ring, float check cushion bushing
118	Piston
119	Piston Seal
120	Piston Seal Energizer
121	Wear Ring
122	Retainer Bolt
123	Washer, tie rod nut
124	O-Ring, piston to rod seal

⚠ **PROP 65 WARNING** **WARNING:** This product can expose you to chemicals including **Lead and Lead Compounds** which are known to the State of California to cause cancer and birth defects or other reproductive harm. For more information go to www.P65Warnings.ca.gov

1.50" - 6.00" Bore Series 2HB

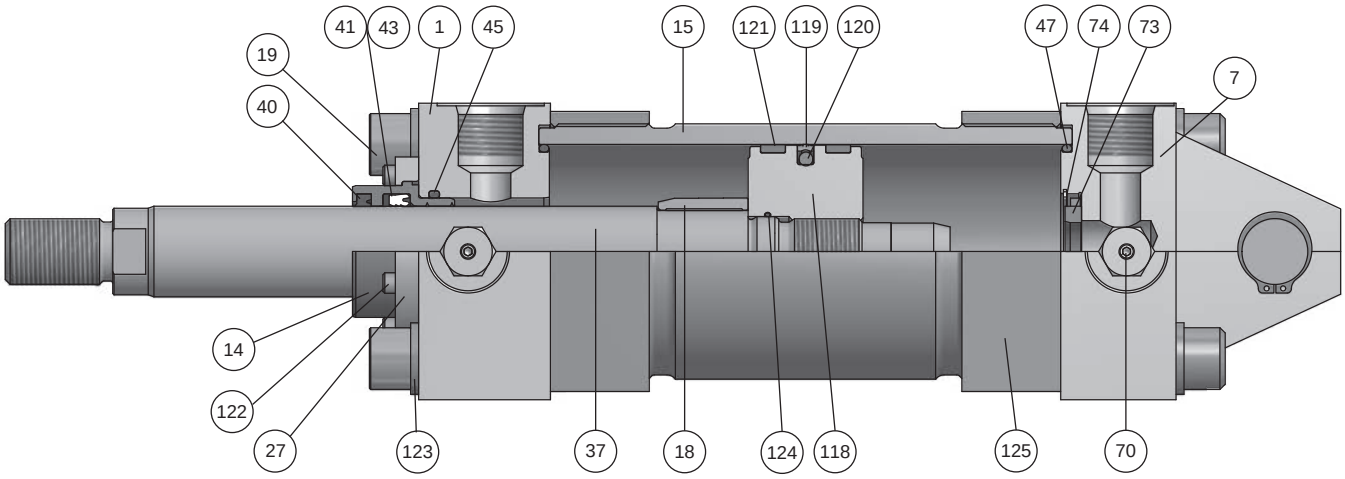

Piston and Rod Assemblies

Factory assembled piston and rod assemblies (that include seals for piston type specified) are recommended.

Parts List — 1.50" through 6.00" Bore

Symbol	Description
1	Head
7	Cap
14	Rod Gland
15	Cylinder Body
18	Cushion Sleeve, head end cushion
19	Tie Bolt
27	Retainer
37	Piston Rod, single rod type
40	Rod Wiper
41	Rod Seal
43	Back-up Washer, rod seal
45	Gland O-Ring

Symbol	Description
47	O-Ring, cylinder tube to head and cap seal
70	Needle Valve, cushion adjustment cartridge
73	Bushing, float check, cushion on cap end
74	Retaining Ring, float check cushion bushing
118	Piston
119	Piston Seal
120	Piston Seal Energizer
121	Wear Ring
122	Retainer Bolt
123	Washer, tie bolt
124	O-Ring, piston to rod seal
125	Body Flange

⚠**PROP 65 WARNING** **WARNING:** This product can expose you to chemicals including **Lead and Lead Compounds** which are known to the State of California to cause cancer and birth defects or other reproductive harm. For more information go to www.P65Warnings.ca.gov

Series 2H Gland Cartridge Kits and Rod Seal Kits

Rod Ø	Seal Type									
	Class 1 Service (Polyurethane & Nitrile)		Class 3 Service (EPR)		Class 5 Service (FKM)		Class 2 & 6 Service (Nitroxile)		Class 8 Service (Filled PTFE & Fluorocarbon)	
	Contains 1 ea. Sym. #14, 40, 41 & 45		Contains 1 ea. Sym. #14, 40, 41 & 45		Contains 1 ea. Sym. #14, 40, 41 & 45		Contains 1 ea. Sym. #14, 40, 41 & 45		Contains 1 ea. Sym. #14, 40, 41 & 45	
	Gland Cartridge Kits	Rod Seal Kits[1]	Gland Cartridge Kits	Rod Seal Kits[1]	Gland Cartridge Kits	Rod Seal Kits[1]	Gland Cartridge Kits	Rod Seal Kits[1]	Gland Cartridge Kits	Rod Seal Kits[1]
0.625	RG2HLG2061	RK2HLG2061	RG2AHLG063	RK2AHLG063	RG2AHLG065	RK2AHLG065	RG2AHLG062	RK2AHLG062	N/A	N/A
1.000	RG2HLG2101	RK2HLG2101	RG2AHLG103	RK2AHLG103	RG2AHLG105	RK2AHLG105	RG2AHLG102	RK2AHLG102	RG2AHLG108	RK2AHLG108
1.375	RG2HLG2131	RK2HLG2131	RG2AHLG133	RK2AHLG133	RG2AHLG135	RK2AHLG135	RG2AHLG132	RK2AHLG132	RG2AHLG138	RK2AHLG138
1.750	RG2HLG2171	RK2HLG2171	RG2AHLG173	RK2AHLG173	RG2AHLG175	RK2AHLG175	RG2AHLG172	RK2AHLG172	RG2AHLG178	RK2AHLG178
2.000	RG2HLG2201	RK2HLG2201	RG2AHLG203	RK2AHLG203	RG2AHLG205	RK2AHLG205	RG2AHLG202	RK2AHLG202	RG2AHLG208	RK2AHLG208
2.500	RG2HLG2251	RK2HLG2251	RG2AHLG253	RK2AHLG253	RG2AHLG255	RK2AHLG255	RG2AHLG252	RK2AHLG252	RG2AHLG258	RK2AHLG258
3.000	RG2HLG2301	RK2HLG2301	RG2AHLG303	RK2AHLG303	RG2AHLG305	RK2AHLG305	RG2AHLG302	RK2AHLG302	RG2AHLG308	RK2AHLG308
3.500	RG2HLG2351	RK2HLG2351	RG2AHLG353	RK2AHLG353	RG2AHLG355	RK2AHLG355	RG2AHLG352	RK2AHLG352	RG2AHLG358	RK2AHLG358
4.000	RG2HLG2401	RK2HLG2401	RG2AHLG403	RK2AHLG403	RG2AHLG405	RK2AHLG405	RG2AHLG402	RK2AHLG402	RG2AHLG408	RK2AHLG408

[1] Rod Seal Kits do not include Sym. #14

Series 2HD & 2HB Gland Cartridge Kits and Rod Seal Kits

Rod Ø	Seal Type									
	Class 1 Service (Polyurethane & Nitrile)		Class 3 Service (EPR)		Class 5 Service (FKM)		Class 2 & 6 Service (Nitroxile)		Class 8 Service (Filled PTFE & Fluorocarbon)	
	Contains 1 ea. Sym. #14, 40, 41 & 45		Contains 1 ea. Sym. #14, 40, 41 & 45		Contains 1 ea. Sym. #14, 40, 41 & 45		Contains 1 ea. Sym. #14, 40, 41 & 45		Contains 1 ea. Sym. #14, 40, 41 & 45	
	Gland Cartridge Kits	Rod Seal Kits[1]	Gland Cartridge Kits	Rod Seal Kits[1]	Gland Cartridge Kits	Rod Seal Kits[1]	Gland Cartridge Kits	Rod Seal Kits[1]	Gland Cartridge Kits	Rod Seal Kits[1]
0.625	RG2HDG2061	RK2HDG2061	RG2HDG2063	RK2HDG2063	RG2HDG2065	RK2HDG2065	RG2HDG2062	RK2HDG2062	N/A	N/A
1.000	RG2HDG2101	RK2HDG2101	RG2HDG2103	RK2HDG2103	RG2HDG2105	RK2HDG2105	RG2HDG2102	RK2HDG2102	RG2HDG2108	RK2AHLG108
1.375	RG2HDG2131	RK2HDG2131	RG2HDG2133	RK2HDG2133	RG2HDG2135	RK2HDG2135	RG2HDG2132	RK2HDG2132	RG2HDG2138	RK2AHLG138
1.750	RG2HDG2171	RK2HDG2171	RG2HDG2173	RK2HDG2173	RG2HDG2175	RK2HDG2175	RG2HDG2172	RK2HDG2172	RG2HDG2178	RK2AHLG178
2.000	RG2HDG2201	RK2HDG2201	RG2HDG2203	RK2HDG2203	RG2HDG2205	RK2HDG2205	RG2HDG2202	RK2HDG2202	RG2HDG2208	RK2AHLG208
2.500	RG2HDG2251	RK2HDG2251	RG2HDG2253	RK2HDG2253	RG2HDG2255	RK2HDG2255	RG2HDG2252	RK2HDG2252	RG2HDG2258	RK2AHLG258
3.000	RG2HDG2301	RK2HDG2301	RG2HDG2303	RK2HDG2303	RG2HDG2305	RK2HDG2305	RG2HDG2302	RK2HDG2302	RG2HDG2308	RK2AHLG308
3.500	RG2HDG2351	RK2HDG2351	RG2HDG2353	RK2HDG2353	RG2HDG2355	RK2HDG2355	RG2HDG2352	RK2HDG2352	RG2HDG2358	RK2AHLG358
4.000	RG2HDG2401	RK2HDG2401	RG2HDG2403	RK2HDG2403	RG2HDG2405	RK2HDG2405	RG2HDG2402	RK2HDG2402	RG2HDG2408	RK2AHLG408

[1] Rod Seal Kits do not include Sym. #14

Series 2HD & 2HB / 3HD & 3HB Crown Wiper Gland Cartridge Kits and Rod Seal Kits

Rod Ø	Seal Type				Retainer Bolt Torque (Torque values are for bolts installed with lubrication)
	Class 1 Service (Polyurethane & Nitrile)		Class 5 Service (FKM)		
	Contains 1 ea. Sym. #14, 40, 41 & 45		Contains 1 ea. Sym. #14, 40, 41 & 45		
	Crown Wiper Gland Cartridge Kits	Crown Wiper Rod Seal Kits[2]	Crown Wiper Gland Cartridge Kits	Crown Wiper Rod Seal Kits[2]	
0.625	RGCW2HG061	RKCW2HG061	RGCW2HG065	RKCW2HG065	40 - 42 lb-in
1.000	RGCW2HG101	RKCW2HG101	RGCW2HG105	RKCW2HG105	40 - 42 lb-in
1.375	RGCW2HG131	RKCW2HG131	RGCW2HG135	RKCW2HG135	56 - 58 lb-in
1.750	RGCW2HG171	RKCW2HG171	RGCW2HG175	RKCW2HG175	56 - 58 lb-in
2.000	RGCW2HG201	RKCW2HG201	RGCW2HG205	RKCW2HG205	11 - 12 ft-lb
2.500	RGCW2HG251	RKCW2HG251	RGCW2HG255	RKCW2HG255	11 - 12 ft-lb
3.000	RGCW2HG301	RKCW2HG301	RGCW2HG305	RKCW2HG305	23 - 25 ft-lb
3.500	RGCW2HG351	RKCW2HG351	RGCW2HG355	RKCW2HG355	23 - 25 ft-lb
4.000	RGCW2HG401	RKCW2HG401	RGCW2HG405	RKCW2HG405	41 - 43 ft-lb
4.500	RGCW2HG451	RKCW2HG451	RGCW2HG455	RKCW2HG455	41 - 43 ft-lb
5.000	RGCW2HG501	RKCW2HG501	RGCW2HG505	RKCW2HG505	41 - 43 ft-lb
5.500	RGCW2HG551	RKCW2HG551	RGCW2HG555	RKCW2HG555	41 - 43 ft-lb

[2] Rod Seal Kits do not include Sym. #14

2H, 2HD & 2B Rod Gland Cartridge Kit and Rod Seal Kit Parts Identification

- Gland Cartridge Kits contain items 14, 40, 41 and 45 (43 in class 2, 5 & 6 kits only)
- Rod Seal Kits contain items 40, 41 and 45 (43 in class 2, 5 & 6 kits only)

Series 2H

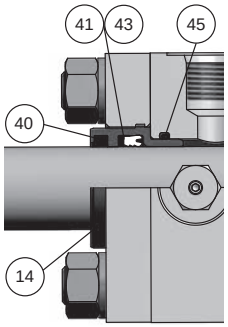

Series 2HD & 2HB

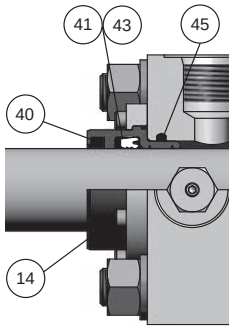

⚠PROP 65 WARNING **WARNING:** This product can expose you to chemicals including **Lead and Lead Compounds** which are known to the State of California to cause cancer and birth defects or other reproductive harm. For more information go to www.P65Warnings.ca.gov

Piston Seal Kits – Series 2H / 2HD / 2HB – Includes cylinder body end seals

Piston Seal Code	Piston Magnet Code	Seal Class	Bore Diameter Kits include two each of items 47 & 121 (one of item 121 for magnetic piston) and one each of items 119[1] & 120.						
			1.50	**2.00**	**2.50**	**3.25**	**4.00**	**5.00**	**6.00**
H	N	1	PK152HH001	PK202HH001	PK252HH001	PK322HH001	PK402HH001	PK502HH001	PK602HH001
H	3, 7	1	PK152HHM01	PK202HHM01	PK252HHM01	PK322HHM01	PK402HHM01	PK502HHM01	PK602HHM01
H	N	4	PK152HH004	PK202HH004	PK252HH004	PK322HH004	PK402HH004	PK502HH004	PK602HH004
H	3, 7	4	PK152HHM04	PK202HHM04	PK252HHM04	PK322HHM04	PK402HHM04	PK502HHM04	PK602HHM04
K	N	1	PK152HF001	PK202HF001	PK252HF001	PK322HF001	PK402HF001	PK502HF001	PK602HF001
K	N	2 ,6	PK152HF002	PK202HF002	PK252HF002	PK322HF002	PK402HF002	PK502HF002	PK602HF002
K	3, 7	1	PK152HFM01	PK202HFM01	PK252HFM01	PK322HFM01	PK402HFM01	PK502HFM01	PK602HFM01
K	3, 7	2 ,6	PK152HFM02	PK202HFM02	PK252HFM02	PK322HFM02	PK402HFM02	PK502HFM02	PK602HFM02
K	N	3	PK152HF003	PK202HF003	PK252HF003	PK322HF003	PK402HF003	PK502HF003	PK602HF003
K	3, 7	3	PK152HFM03	PK202HFM03	PK252HFM03	PK322HFM03	PK402HFM03	PK502HFM03	PK602HFM03
K	N	4	PK152HF004	PK202HF004	PK252HF004	PK322HF004	PK402HF004	PK502HF004	PK602HF004
K	3, 7	4	PK152HFM04	PK202HFM04	PK252HFM04	PK322HFM04	PK402HFM04	PK502HFM04	PK602HFM04
K	N	5	PK152HF005	PK202HF005	PK252HF005	PK322HF005	PK402HF005	PK502HF005	PK602HF005
K	N	8	PK152HF008	PK202HF008	PK252HF008	PK322HF008	PK402HF008	PK502HF008	PK602HF008
K	3, 7	5	PK152HFM05	PK202HFM05	PK252HFM05	PK322HFM05	PK402HFM05	PK502HFM05	PK602HFM05
R	N	1	PK152HR001	PK202HR001	PK252HR001	PK322HR001	PK402HR001	PK502HR001	PK602HR001
R	N	2 ,6	PK152HR002	PK202HR002	PK252HR002	PK322HR002	PK402HR002	PK502HR002	PK602HR002
R	3, 7	1	PK152HRM01	PK202HRM01	PK252HRM01	PK322HRM01	PK402HRM01	PK502HRM01	PK602HRM01
R	3, 7	2 ,6	PK152HRM02	PK202HRM02	PK252HRM02	PK322HRM02	PK402HRM02	PK502HRM02	PK602HRM02
R	N	3	PK152HR003	PK202HR003	PK252HR003	PK322HR003	PK402HR003	PK502HR003	PK602HR003
R	3, 7	3	PK152HRM03	PK202HRM03	PK252HRM03	PK322HRM03	PK402HRM03	PK502HRM03	PK602HRM03
R	N	4	PK152HR004	PK202HR004	PK252HR004	PK322HR004	PK402HR004	PK502HR004	PK602HR004
R	3, 7	4	PK152HRM04	PK202HRM04	PK252HRM04	PK322HRM04	PK402HRM04	PK502HRM04	PK602HRM04
R	N	5	PK152HR005	PK202HR005	PK252HR005	PK322HR005	PK402HR005	PK502HR005	PK602HR005
R	3, 7	5	PK152HRM05	PK202HRM05	PK252HRM05	PK322HRM05	PK402HRM05	PK502HRM05	PK602HRM05
W	N	1	PK152HW001	PK202HW001	PK252HW001	PK322HW001	PK402HW001	PK502HW001	PK602HW001
W	N	2 ,6	PK152HW002	PK202HW002	PK252HW002	PK322HW002	PK402HW002	PK502HW002	PK602HW002
W	3, 7	1	PK152HWM01	PK202HWM01	PK252HWM01	PK322HWM01	PK402HWM01	PK502HWM01	PK602HWM01
W	3, 7	2 ,6	PK152HWM02	PK202HWM02	PK252HWM02	PK322HWM02	PK402HWM02	PK502HWM02	PK602HWM02
W	N	3	PK152HW003	PK202HW003	PK252HW003	PK322HW003	PK402HW003	PK502HW003	PK602HW003
W	3, 7	3	PK152HWM03	PK202HWM03	PK252HWM03	PK322HWM03	PK402HWM03	PK502HWM03	PK602HWM03
W	N	5	PK152HW005	PK202HW005	PK252HW005	PK322HW005	PK402HW005	PK502HW005	PK602HW005
W	3, 7	5	PK152HWM05	PK202HWM05	PK252HWM05	PK322HWM05	PK402HWM05	PK502HWM05	PK602HWM05
2H / 2HD Tie Rod Torque			**1.50**	**2.00**	**2.50**	**3.25**	**4.00**	**5.00**	**6.00**
and 2HB Tie Bolt Torque			18 - 19 lb-ft	45 - 49 lb-ft	45 - 49 lb-ft	120 - 124 lb-ft	131 - 135 lb-ft	312 - 316 lb-ft	528 - 544 lb-ft

Note: The tie rod torque values are for cylinders rated at 3,000 psi. Consult the factory for torque values for cylinders rated above 3,000 psi

[1] Item 119 for piston style WP (model number code W) includes both the PTFE primary seal and the redundant quad ring seal.

[2] The 1.50" bore WP seal groove is unique and not universal to the other seal styles. Changing an existing 1.50" bore cylinder either from or to a WP piston seal requires that a new piston and rod assembly be ordered.

HP Piston

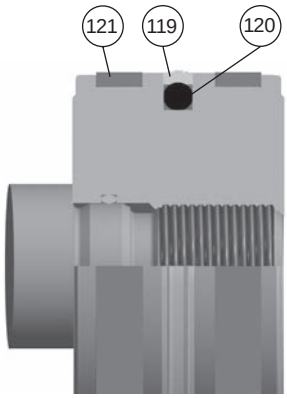

KP Piston

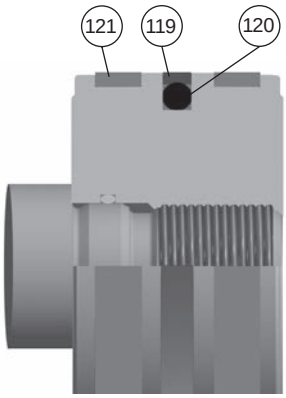

RP Piston

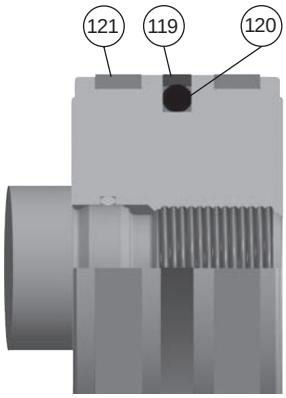

WP Piston

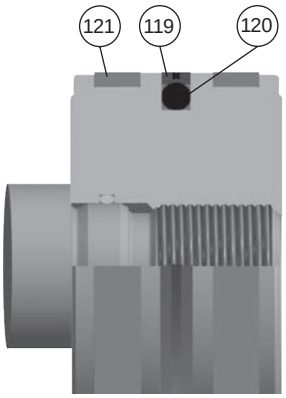

Note: Item 47, cylinder body end seal, is not shown.

⚠PROP 65 WARNING **WARNING:** This product can expose you to chemicals including **Lead and Lead Compounds** which are known to the State of California to cause cancer and birth defects or other reproductive harm. For more information go to www.P65Warnings.ca.gov

7.00" & 8.00" Bore Series 3H

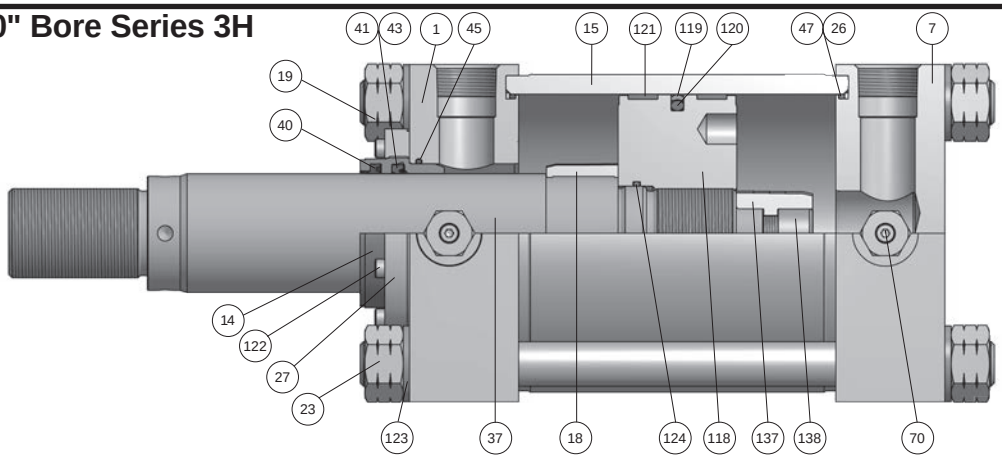

7.00" & 8.00" Bore Series 3HD

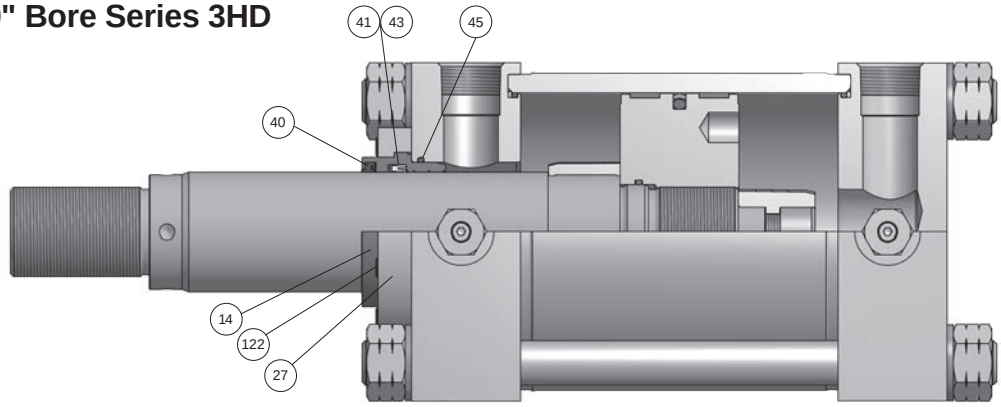

7.00" & 8.00" Bore Series 3HB

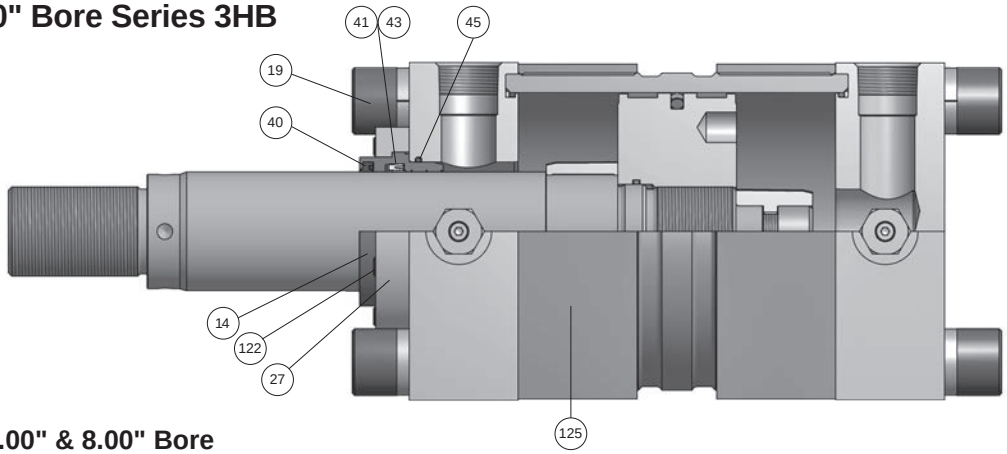

Parts List – 7.00" & 8.00" Bore

Symbol	Description
1	Head
7	Cap
14	Rod Gland
15	Cylinder Body
18	Cushion Sleeve, head end cushion
19	Tie Rod or Tie Bolt
23	Tie Rod Nut
26	Back-up Washer, tube end seal
27	Retainer
37	Piston Rod, single rod type
40	Rod Wiper
41	Rod Seal
43	Back-up Washer, rod seal

Symbol	Description
45	Gland O-Ring
47	O-Ring, cylinder tube to head and cap seal
70	Needle Valve, cushion adjustment cartridge
118	Piston
119	Piston Seal
120	Piston Seal Energizer
121	Wear Ring
122	Retainer Bolt
123	Washer, tie rod or tie bolt
124	O-Ring, piston to rod seal
125	Body Flange
137	Cushion Spear, detachable
138	Bolt, cushion spear

⚠PROP 65 WARNING **WARNING:** This product can expose you to chemicals including **Lead and Lead Compounds** which are known to the State of California to cause cancer and birth defects or other reproductive harm. For more information go to www.P65Warnings.ca.gov

Series 3H – 7.00" & 8.00" Bore Gland Cartridge Kits and Rod Seal Kits

Rod Ø	Seal Type									
	Class 1 Service (Polyurethane & Nitrile)		Class 3 Service (EPR)		Class 5 Service (FKM)		Class 2 & 6 Service (Nitroxile)		Class 8 Service (Filled PTFE & Fluorocarbon)	
	Contains 1 ea. Sym. #14, 40, 41 & 45		Contains 1 ea. Sym. #14, 40, 41 & 45		Contains 1 ea. Sym. #14, 40, 41 & 45		Contains 1 ea. Sym. #14, 40, 41 & 45		Contains 1 ea. Sym. #14, 40, 41 & 45	
	Gland Cartridge Kits	Rod Seal Kits[1]	Gland Cartridge Kits	Rod Seal Kits[1]	Gland Cartridge Kits	Rod Seal Kits[1]	Gland Cartridge Kits	Rod Seal Kits[1]	Gland Cartridge Kits	Rod Seal Kits[1]
3.000	RG2HLG2301	RK2HLG2301	RG2AHLG303	RK2AHLG303	RG2AHLG305	RK2AHLG305	RG2AHLG302	RK2AHLG302	RG2AHLG308	RK2AHLG308
3.500	RG2HLG2351	RK2HLG2351	RG2AHLG353	RK2AHLG353	RG2AHLG355	RK2AHLG355	RG2AHLG352	RK2AHLG352	RG2AHLG358	RK2AHLG358
4.000	RG2HLG2401	RK2HLG2401	RG2AHLG403	RK2AHLG403	RG2AHLG405	RK2AHLG405	RG2AHLG402	RK2AHLG402	RG2AHLG408	RK2AHLG408
4.500	RG2HLG2451	RK2HLG2451	RG2AHLG453	RK2AHLG453	RG2AHLG455	RK2AHLG455	RG2AHLG452	RK2AHLG452	RG2AHLG458	RK2AHLG458
5.000	RG2HLG2501	RK2HLG2501	RG2AHLG503	RK2AHLG503	RG2AHLG505	RK2AHLG505	RG2AHLG502	RK2AHLG502	RG2AHLG508	RK2AHLG508
5.500	RG2HLG2551	RK2HLG2551	RG2AHLG553	RK2AHLG553	RG2AHLG555	RK2AHLG555	RG2AHLG552	RK2AHLG552	RG2AHLG558	RK2AHLG558

[1] Rod Seal Kits do not include Sym. #14

Series 3HD & 3HB – 7.00" & 8.00" Bore Gland Cartridge Kits and Rod Seal Kits

Rod Ø	Seal Type									
	Class 1 Service (Polyurethane & Nitrile)		Class 3 Service (EPR)		Class 5 Service (FKM)		Class 2 & 6 Service (Nitroxile)		Class 8 Service (Filled PTFE & Fluorocarbon)	
	Contains 1 ea. Sym. #14, 40, 41 & 45		Contains 1 ea. Sym. #14, 40, 41 & 45		Contains 1 ea. Sym. #14, 40, 41 & 45		Contains 1 ea. Sym. #14, 40, 41 & 45		Contains 1 ea. Sym. #14, 40, 41 & 45	
	Gland Cartridge Kits	Rod Seal Kits[1]	Gland Cartridge Kits	Rod Seal Kits[1]	Gland Cartridge Kits	Rod Seal Kits[1]	Gland Cartridge Kits	Rod Seal Kits[1]	Gland Cartridge Kits	Rod Seal Kits[1]
3.000	RG2HDG2301	RK2HDG2301	RG2HDG2303	RK2HDG2303	RG2HDG2305	RK2HDG2305	RG2HDG2302	RK2HDG2302	RG2HDG2308	RK2AHLG308
3.500	RG2HDG2351	RK2HDG2351	RG2HDG2353	RK2HDG2353	RG2HDG2355	RK2HDG2355	RG2HDG2352	RK2HDG2352	RG2HDG2358	RK2AHLG358
4.000	RG2HDG2401	RK2HDG2401	RG2HDG2403	RK2HDG2403	RG2HDG2405	RK2HDG2405	RG2HDG2402	RK2HDG2402	RG2HDG2408	RK2AHLG408
4.500	RG2HDG2451	RK2HDG2451	RG2HDG2453	RK2HDG2453	RG2HDG2455	RK2HDG2455	RG2HDG2452	RK2HDG2452	RG2HDG2458	RK2AHLG458
5.000	RG2HDG2501	RK2HDG2501	RG2HDG2503	RK2HDG2503	RG2HDG2505	RK2HDG2505	RG2HDG2502	RK2HDG2502	RG2HDG2508	RK2AHLG508
5.500	RG2HDG2551	RK2HDG2551	RG2HDG2553	RK2HDG2553	RG2HDG2555	RK2HDG2555	RG2HDG2552	RK2HDG2552	RG2HDG2558	RK2AHLG558

[1] Rod Seal Kits do not include Sym. #14

Piston Seal Kits – Series 3H / 3HD / 3HB – Includes cylinder body end seals

Piston Seal Code	Piston Magnet Code	Seal Class	Bore Diameter Kits include two each of items 47 & 121 and one each of items 119[1] & 120.		Piston Seal Code	Piston Magnet Code	Seal Class	Bore Diameter Kits include two each of items 47 & 121 and one each of items 119[1] & 120.	
			7.00	8.00				7.00	8.00
H	N	1	PK703HH001	PK803HH001	R	N	1	PK703HR001	PK803HR001
H	N	4	PK703HH004	PK803HH004	R	N	2, 6	PK703HR002	PK803HR002
K	N	1	PK703HF001	PK803HF001	R	N	3	PK703HR003	PK803HR003
K	N	2, 6	PK703HF002	PK803HF002	R	N	4	PK703HR004	PK803HR004
K	N	3	PK703HF003	PK803HF003	R	N	5	PK703HR005	PK803HR005
K	N	4	PK703HF004	PK803HF004	W	N	1	PK703HW001	PK803HW001
K	N	5	PK703HF005	PK803HF005	W	N	2, 6	PK703HW002	PK803HW002
K	N	8	PK703HF008	PK803HF008	W	N	3	PK703HW003	PK803HW003
3H / 3HD Tie Rod Torque and 3HB Tie Bolt Torque			**7.00**	**8.00**	W	N	5	PK703HW005	PK803HW005
			800 - 816 lb-ft	1168 - 1184 lb-ft	**3H / 3HD Tie Rod Torque and 3HB Tie Bolt Torque**			**7.00**	**8.00**
								800 - 816 lb-ft	1168 - 1184 lb-ft

Note: The tie rod torque values are for cylinders rated at 3,000 psi.
Consult the factory for torque values for cylinders rated above 3,000 psi

[1] Item 119 for piston style WP (model number code W) includes both the PTFE primary seal and the redundant quad ring seal.

⚠ **PROP 65 WARNING** **WARNING:** This product can expose you to chemicals including **Lead and Lead Compounds** which are known to the State of California to cause cancer and birth defects or other reproductive harm. For more information go to www.P65Warnings.ca.gov

10.00" - 20.00" Bore Series 3H

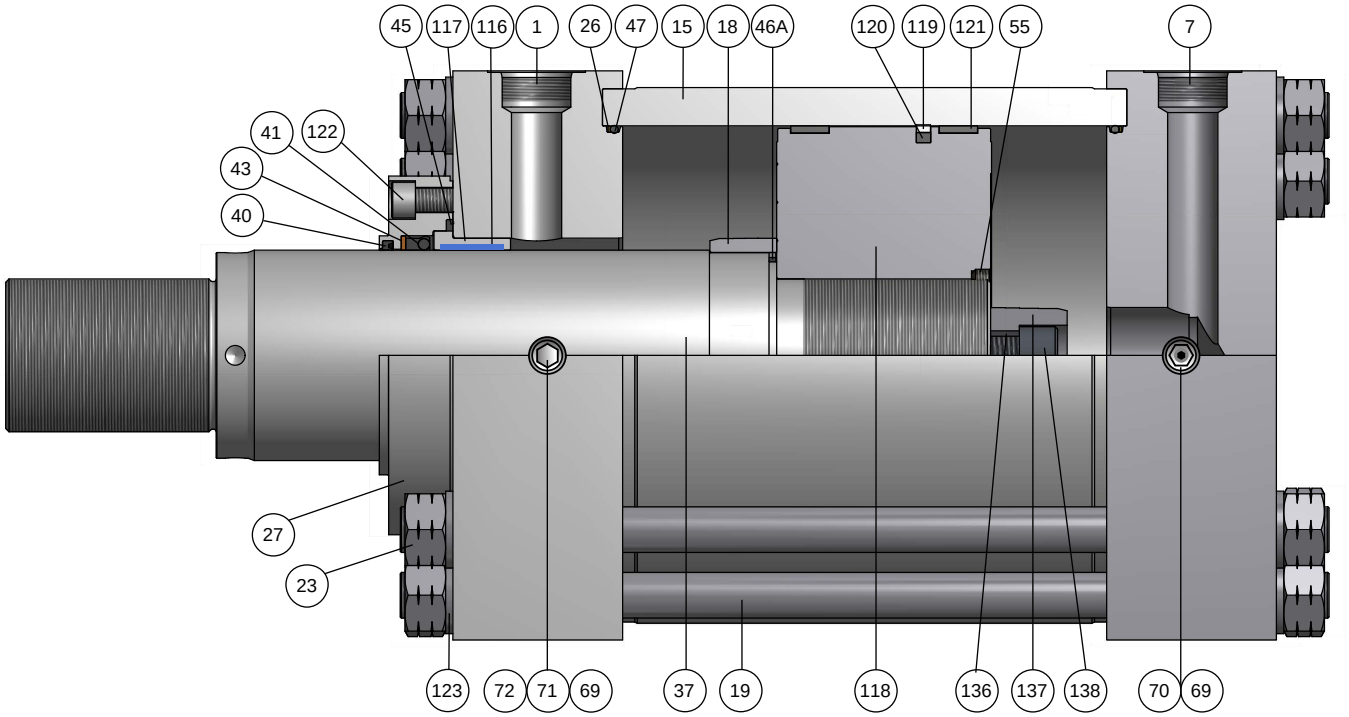

Symbol	Description
1	Head
7	Cap
15	Cylinder Body
18	Cushion Sleeve, head end cushion
19	Tie Rod
23	Tie Rod Nut
26	Back-up Washer, tube end seal
27	Retainer
37	Piston Rod, single rod type
40	Rod Wiperseal
41	Rod Seal
43	Back-up Washer, rod seal
45	Gland O-Ring
46A	Cushion Sealing Ring
47	O-Ring, cylinder tube to head and cap seal

Symbol	Description
55	Set Screw, piston lock
70	Cushion Adjusting Needle Assembly
72, 71, 69	Check Valve Screw, Ball, O-Ring
116	Wear Ring Rod
117	Rod Bushing (Gland)
118	Piston
119	Piston Seal
119 A	Quad (WP only) Ring (see closeup below)
120	Piston Seal Energizer
121	Wear Ring
122	Retainer Bolt
123	Washer, tie rod nut
136	Spacer, cushion
137	Cushion Spear, detachable
138	Bolt, cushion spear

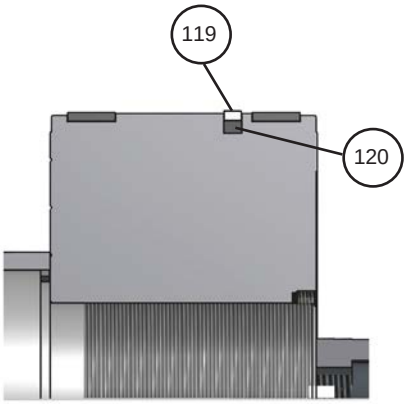

Standard HP, KP, RP Style Piston Seals

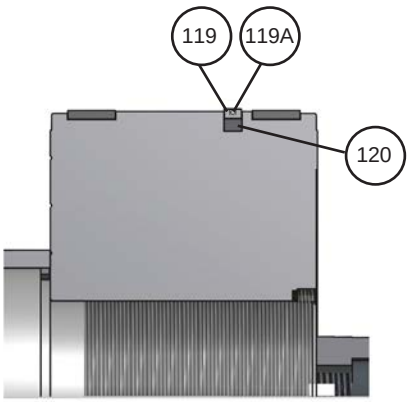

Optional WP Style Mixed Media Piston Seal

⚠PROP 65 WARNING **WARNING:** This product can expose you to chemicals including **Lead and Lead Compounds** which are known to the State of California to cause cancer and birth defects or other reproductive harm. For more information go to www.P65Warnings.ca.gov

10.00" - 20.00" Bore Series 3H

3H Large Bore Seal Kits

Ø Rod	Rod Seal Kits (including Wear Ring)			Rod Seal Kits (including Wear Ring & Bushing)		
	Contains Symbols			Contains Symbols		
	40, 41, 43, 45, 116			40, 41, 43, 45, 116, 117		
	Group 1	Group 2	Group 5	Group 1	Group 2	Group 5
4.500	RK3HHG0451	RK3HHG0452	RK3HHG0455	RG3HHG0451	RG3HHG0452	RG3HHG0455
5.000	RK3HHG0501	RK3HHG0502	RK3HHG0505	RG3HHG0501	RG3HHG0502	RG3HHG0505
5.500	RK3HHG0551	RK3HHG0552	RK3HHG0555	RG3HHG0551	RG3HHG0552	RG3HHG0555
7.000	RK3HHG0701	RK3HHG0702	RK3HHG0705	RG3HHG0701	RG3HHG0702	RG3HHG0705
8.000	RK3HHG0801	RK3HHG0802	RK3HHG0805	RG3HHG0801	RG3HHG0802	RG3HHG0805
9.000	RK3HHG0901	RK3HHG0902	RK3HHG0905	RG3HHG0901	RG3HHG0902	RG3HHG0905
10.000	RK3HHG1001	RK3HHG1002	RK3HHG1005	RG3HHG1001	RG3HHG1002	RG3HHG1005

Ø Rod	Retainer Bolt Torques	
	Nom. Bolt Size	Torque
4.500	1/2	100 - 105 lb-ft
5.000	5/8	185 - 194 lb-ft
5.500	5/8	185 - 194 lb-ft
7.000	1/2	100 - 105 lb-ft
8.000	3/4	330 - 346 lb-ft
9.000	3/4	330 - 346 lb-ft
10.000	3/4	330 - 346 lb-ft

Ø Bore	Tie Rod Torques
10.00	800 - 850 lb-ft
12.00	1300 - 1350 lb-ft
14.00	1175 - 1225 lb-ft
16.00	2900 - 3000 lb-ft
18.00	2350 - 2450 lb-ft
20.00	2900 - 3000 lb-ft

Ø Bore	Cylinder Body End Seals		
	Contains Symbols		
	(2X) 47	(2X) 26, (2X) 47	
	Group 1	Group 2	Group 5
10.00	CB1003HG01	CB1003HG02	CB1003HG05
12.00	CB1203HG01	CB1203HG02	CB1203HG05
14.00	CB1403HG01	CB1403HG02	CB1403HG05
16.00	CB1603HG01	CB1603HG02	CB1603HG05
18.00	CB1803HG01	CB1803HG02	CB1803HG05
20.00	CB2003HG01	CB2003HG02	CB2003HG05

3H Large Bore Piston Seal Kits

Ø Bore	Piston Seal Kits			
	Contains Symbols			
	(2X) 47, 119, 120, (2X) 121, 119A (WP Kit only)			
	HP Group 1	KP Group 1	RP Group 1	WP Group 1
10.00	PK1003HH01	PK1003HK01	PK1003HR01	PK1003HW01
12.00	PK1203HH01	PK1203HK01	PK1203HR01	PK1203HW01
14.00	PK1403HH01	PK1403HK01	PK1403HR01	PK1403HW01
16.00	PK1603HH01	PK1603HK01	PK1603HR01	PK1603HW01
18.00	PK1803HH01	PK1803HK01	PK1803HR01	PK1803HW01
20.00	PK2003HH01	PK2003HK01	PK2003HR01	PK2003HW01

Ø Bore	Piston Seal Kits					
	Contains Symbols					
	(2X) 26, (2X) 47, 119, 120, (2X) 121, 119A (WP Kit only)					
	KP Group 2	RP Group 2	WP Group 2	KP Group 5	RP Group 5	WP Group 5
10.00	PK1003HK02	PK1003HR02	PK1003HW02	PK1003HK05	PK1003HR05	PK1003HW05
12.00	PK1203HK02	PK1203HR02	PK1203HW02	PK1203HK05	PK1203HR05	PK1203HW05
14.00	PK1403HK02	PK1403HR02	PK1403HW02	PK1403HK05	PK1403HR05	PK1403HW05
16.00	PK1603HK02	PK1603HR02	PK1603HW02	PK1603HK05	PK1603HR05	PK1603HW05
18.00	PK1803HK02	PK1803HR02	PK1803HW02	PK1803HK05	PK1803HR05	PK1803HW05
20.00	PK2003HK02	PK2003HR02	PK2003HW02	PK2003HK05	PK2003HR05	PK2003HW05

⚠PROP 65 WARNING **WARNING:** This product can expose you to chemicals including **Lead and Lead Compounds** which are known to the State of California to cause cancer and birth defects or other reproductive harm. For more information go to www.P65Warnings.ca.gov

Gland Cartridge Wrenches

Parker's exclusive gland cartridge design makes gland replacement only a minute's work...and the Gland Cartridge Wrench Set makes it even simpler. A specially designed face-type gland wrench with flared lugs slips into an exact, sure fit on the gland, while a self-locking spanner wrench grips the gland wrench securely. No fumbling for adjustment – no accidental scoring of the piston rod, the job is done quickly...easily...safely.

You can order the Cartridge Wrench or Spanner Wrench to fit the piston rod size used in your Parker Hannifin Cylinder.

Rod Ø	Gland Wrench (Symbol 63)	Spanner Wrench (Symbol 63-A)
0.625	0695900000	0116760000
1.000	0695910000	
1.375	0695920000	0117030000
1.750	0695930000	0116770000
2.000	0695940000	
2.500	0695950000	0116770000
3.000	0695960000	
3.500	0695970000	
4.000	0695980000	0116780000
4.500	0838770000	
5.000	0695990000	
5.500	0696000000	

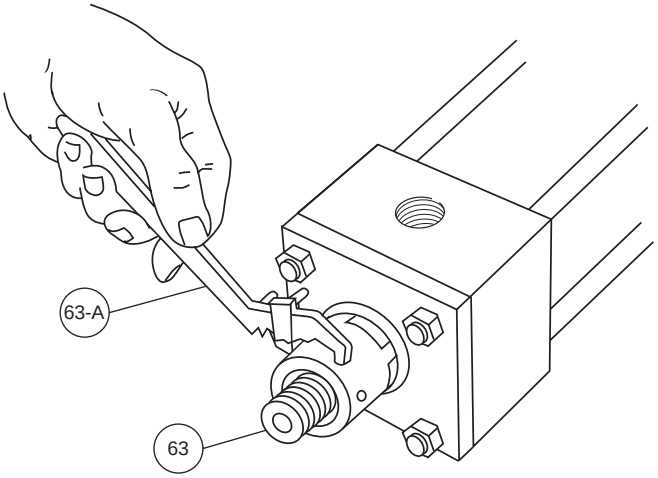

⚠**PROP 65 WARNING** **WARNING:** This product can expose you to chemicals including **Lead and Lead Compounds** which are known to the State of California to cause cancer and birth defects or other reproductive harm. For more information go to www.P65Warnings.ca.gov

Section G

Custom Modifications

Magnetic Piston	152
Magnetic Switch Choices: Tie Rod Mounted ALS and Global Switches	153
Head and Cap Mounted End-of-Stroke Proximity Switches	156-157
Water Submersible Option and How to Order	158-159
Buffer Seal Gland, Rod End Styles and Seal Kits	160-161
Metallic Rod Scraper, Crown Wiper, Rod End Boots, Gland Drain and Air Bleeds	162
Tie Rod Supports, Stroke Adjusters, Thrust Key Mountings and Metric Piston Rod Thread	163
Global Shield™ Rod Coating Technology	164

⚠PROP 65 WARNING **WARNING:** This product can expose you to chemicals including **Lead and Lead Compounds** which are known to the State of California to cause cancer and birth defects or other reproductive harm. For more information go to www.P65Warnings.ca.gov

Series 2H Magnetic Piston

Position Sensing Technology for Hydraulic Cylinders – 1.50" thru 6.00" Bore

Customer Value Proposition

Parker's magnetic sensing option for heavy duty hydraulic cylinders provides OEM's and end users the ability to sense piston position economically and reliably through the use of innovative magnet and switching technology. The magnetic piston option offers all users the ability to eliminate added cylinder machining costs, stand alone external brackets / hardware and reduced system set-up time. By incorporating sensing capability into hydraulic cylinders, the need to install, wire and adjust stand alone proximity switches can be eliminated – thus providing a clean and more efficient position monitoring system.

Series 2H Cylinder with magnetic piston

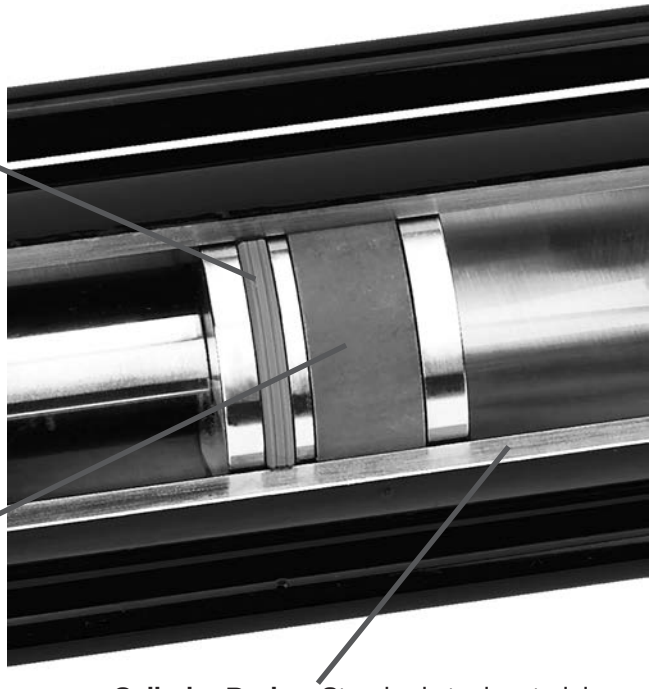

Sensing Technologies

- Parker's ALS switch works with a magnetic piston in a standard steel tube by detecting the change in polarity of the steel material as the magnet passes under the switch. Standard steel tube is more economical in longer strokes than non-ferrous stainless steel tubes required for conventional sensors. Solid State ALS switches are available in both PNP and NPN outputs and can be wired either normally open or normally closed. Magnetic piston with steel tube for ALS switches is available 1.50" – 6.00" bore and is specified with a '7' in the Piston Magnet field of the cylinder model number.
- Parker Global Switches are available in both Reed and Solid State types. Solid State switches are available in both PNP and NPN outputs. They work with a magnetic piston in a 316 stainless steel tube. Magnetic piston with a stainless steel tube for Global Switches is available 1.50" – 4.00" bore and is specified with a '3' in the Piston Magnet field of the cylinder model number.

⚠ **PROP 65 WARNING** **WARNING:** This product can expose you to chemicals including **Lead and Lead Compounds** which are known to the State of California to cause cancer and birth defects or other reproductive harm. For more information go to www.P65Warnings.ca.gov

Magnetic Switch Choices

Parker's ALS switch and Global switch are designed to offer customers an alternative means of sensing hydraulic cylinder piston position. Depending on the application, and the budget, one switch type may be better suited to fulfill customer needs than the other.

Some of the important things to consider when deciding which technology to choose are shown below. For more details on ALS and Global switches as well as other position sensing options see catalog HY08-1132.

ALS Switch

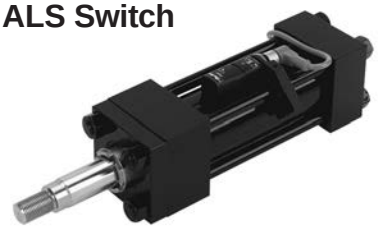

- Compatible with standard steel tube
- +10 to +30 VDC power requirement
- PNP/NPN wired NO or NC
- Solid state construction
- 2 LED indicators (power & target)
- 12mm connector
- IP 67 rated
- Temperature Range: -25°C to +85°C
- Short circuit protection

ALS Switch Kit Part Numbers

Switches are packaged with a mounting bracket.

Part Number		Switch Bracket Usage
PNP	NPN	
ALS-PH	ALS-NH	Series 2H 1.50 – 4.00 Bore
ALS-PHA	ALS-NHA	Series 2H 5.00 & 6.00 Bore

Minimum Stroke for ALS Switch

Bore Ø	Minimum Stroke
1.50	3.00
2.00	3.00
2.50	2.88
3.25	2.75

Bore Ø	Minimum Stroke
4.00	2.63
5.00	2.38
6.00	2.19

ALS Switches allow a .38 - .50 inch stroke-to-go piston travel for end-of-stroke mounting locations.

Global Switch

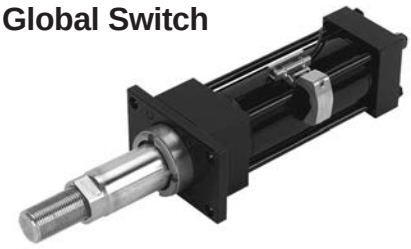

- Uses 316 stainless steel tube
- +10 to +30 VDC power requirement
- PNP/NPN, Reed
- Solid state construction
- 1 power LED indicator
- 8mm connector or flying leads
- IP67 rated
- Temperature Range: -25°C to + 75°C
- Short circuit protection

Global Drop-In Switches

Wiring	Reed	PNP Switch	NPN Switch
3m Flying Leads	P8SAGRFAX	P8SAGPFAX	P8SAGNFAX
10m Flying Leads	P8SAGRFDX2	P8SAGPFDX	P8SAGNFDX
0.3m Lead with 8mm connector	P8SAGRCHX	P8SAGPCHX	P8SAGNCHX

Wiring	PNP Switch ATEX Certified	PNP Switch High Temperature
3m Flying Leads	P8SAGPFAXS	P8S-GPFLH

Global switch tie rod mounting bracket, part number P8S-TMA0X, must be ordered separately.

⚠**PROP 65 WARNING** **WARNING:** This product can expose you to chemicals including **Lead and Lead Compounds** which are known to the State of California to cause cancer and birth defects or other reproductive harm. For more information go to www.P65Warnings.ca.gov

EPS 7 & 6 Sensors
Inductive Proximity

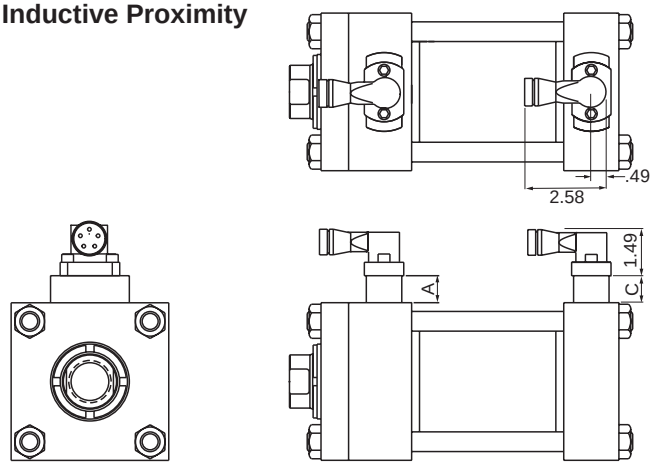

CLS 1 & 4 Sensors
Non-Contacting
Magnetically
Actuated

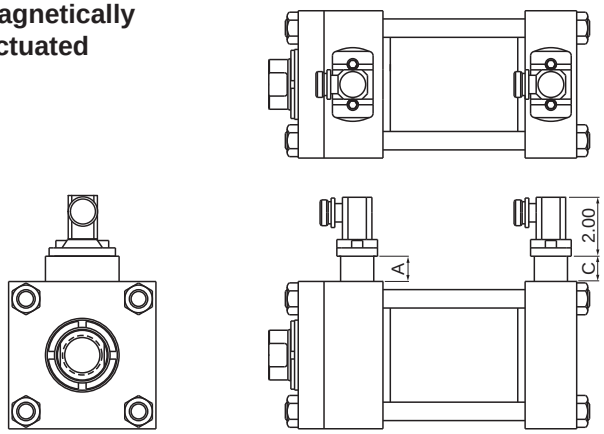

Spacer Height
EPS & CLS Sensors

A max.	C max.
.86	1.75

For exact dimensions, see Bulletin 0840-G-E1.

Connector Pin Numbering

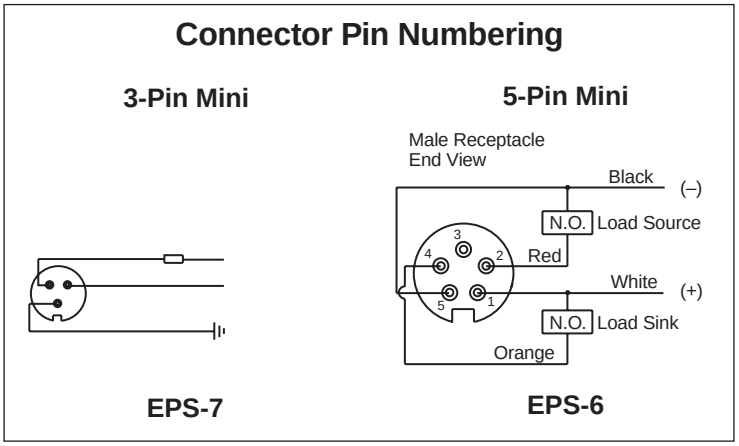

Series and Parallel Wiring

When Parker EPS-6 or 7 sensors are used as inputs to programmable controllers the preferred practice is to connect each sensor to a separate input channel of the PLC. Series or parallel operations may then be accomplished by the internal PLC programming.

Parker EPS-6 or 7 sensors may be hard wired for series operation, but the voltage drop through the sensors (see specifications) must not reduce the available voltage below what is needed to actuate the load.

Parker EPS-6 or 7 sensors may also be hard wired for parallel operation. However, the leakage current of each sensor will pass through the load. The total of all leakage currents must not exceed the current required to actuate the load. In most cases, the use of two or more EPS-6 or 7 sensors in parallel will require the use of a bypass (shunt) resistor.

Minimum Stroke

The minimum stroke for EPS-6 or 7 and CLS-1 or 4 sensors, utilizing standard components, is the cushion sleeve or spear length for the cylinder series in which the sensor is installed. See the Cushion Length Chart in this catalog for details. Contact the factory if a shorter stroke is required.

⚠**PROP 65 WARNING** **WARNING:** This product can expose you to chemicals including **Lead and Lead Compounds** which are known to the State of California to cause cancer and birth defects or other reproductive harm. For more information go to www.P65Warnings.ca.gov

CLS-2 Threaded Style Switches

Spacers are not required. Threaded switches can be adjusted for small changes to end of stroke position sensing.

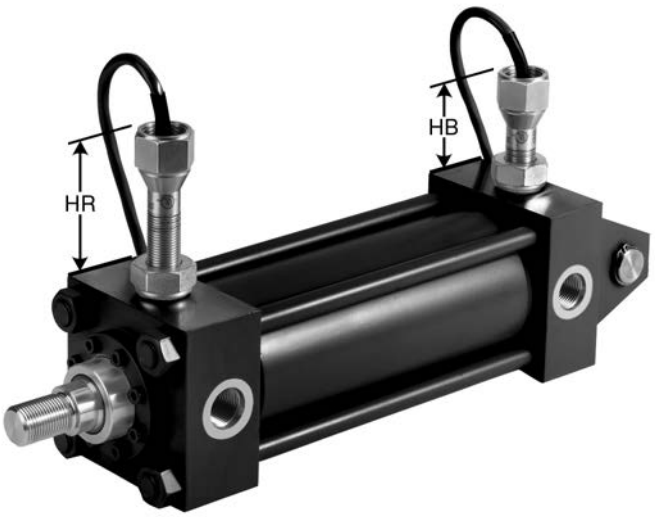

Switch Height

Bore Ø	Rod Ø	HR	HB
1.50	0.625	2.56	3.31
	1.000	2.75	
2.00	1.000	2.56	3.25
	1.375	2.69	
2.50	1.000	2.31	2.94
	1.375	2.50	
	1.750	2.69	
3.25	1.375	2.94	2.56
	1.750	3.13	
	2.000	3.31	
4.00	1.750	2.88	2.44
	2.000	3.06	
	2.500	2.50	
5.00	2.000	2.31	2.31
	2.500	2.63	
	3.000	2.88	
	3.500	3.13	
6.00	2.500	2.13	3.00
	3.000	2.38	
	3.500	2.63	
	4.000	2.88	
7.00	3.000	3.38	2.69
	3.500	2.13	
	4.000	2.38	
	4.500	2.63	
	5.000	3.00	
8.00	3.500	3.13	2.25
	4.000	3.38	
	4.500	2.13	
	5.000	2.50	
	5.500	2.69	

As shown in the illustrations below, these switches are magnetically operated. Dual magnets provide a dependable “snap action” for positive position sensing.

In the “Unoperated” position, the magnet assembly is attracted in the opposite direction of the arrow, causing a finely ground stainless steel connecting rod to hold the contacts open.

In the “Operated” position a ferrous part (cushion or piston) enters the sensing area and attracts the magnet assembly which causes the rod to draw the contacts together.

Operating Principle

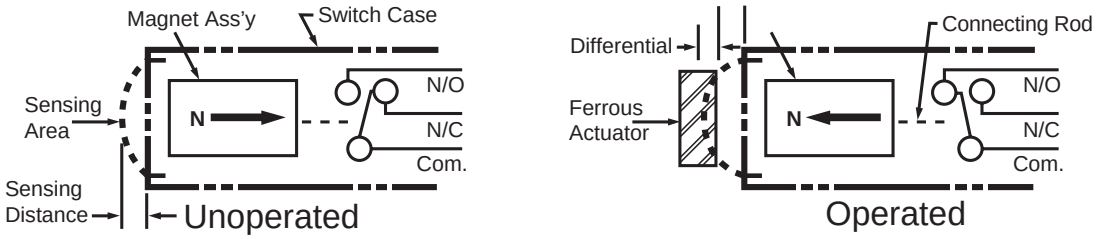

Sensing gap: .030" to .060"

Trip point: Factory set with piston bottomed out.

Release point: Approx. 0.25" piston travel.

Minimum cylinder stroke is .50" on 1.50" & 2.00" bores; and .75" on 2.50" bore and larger.

See the CLS Specification table for additional details.

⚠**PROP 65 WARNING** **WARNING:** This product can expose you to chemicals including **Lead and Lead Compounds** which are known to the State of California to cause cancer and birth defects or other reproductive harm. For more information go to www.P65Warnings.ca.gov

Specifications					
Style:	**EPS-7**	**EPS-6**	**CLS-1**	**CLS-4**	**CLS-2**
Code Designator:	H	D	F	B	G
Description:	Economical, General Purpose, 2 wire device, primarily for AC applications. (Not suitable for 3 wire 24 volt Sinking or Sourcing applications.) Also for automotive industry applications.	Economical, General Purpose, 3 wire, DC sensor, dual output: sinking and sourcing	Functional replacement for AB (Mechanical) Limit Switches in many applications, or where customer needs NC contacts, zero leakage, zero voltage drop, higher or lower load current than EPS-style	Functional replacement for AB (Mechanical) Limit Switches in many High Temperature applications, or where customer needs NC contacts, zero leakage, zero voltage drop, higher or lower load current than EPS-style.	For applications where the customer needs NC contacts, zero leakage, zero voltage drop, higher or lower load current than EPS style. Threaded style permits small adjustability of make/break location.
Supply Voltage:	20 to 250 VAC/DC	10 to 30 VDC	24 to 240 VAC/DC	24 to 240 VAC/DC	24 to 240 VAC/DC
Load Current, min:	8 mA	N/A	NA	NA	NA
Load Current, max:	300 mA	200 mA	4 AMPS @ 120 VAC 3 AMPS @ 24 VDC	4 AMPS @ 120 VAC 3 AMPS @ 24 VDC	4 AMPS @ 120 VAC 3 AMPS @ 24 VDC
Leakage Current:	1.7 mA, max.	10 micro amps max	–	–	–
Voltage Drop:	7 V, max.	2 VDC max.	N/A	NA	None
Operating Temperature:	-14° to +158° F	-14° to +158°F	-40°F to +221°F	-40°F to +400°F	-40°F to +221°F
Sensor Type:	Inductive proximity	Inductive proximity	non-contacting magnetically actuated	non-contacting magnetically actuated	non-contacting magnetically actuated
Part Number:	148897[1]	148896[1]	148275[1]	149109[1]	117000, 117017, 117034
Part Number Suffix[1]:	**[1]4-digit suffix indicates probe length: 0125=1.25", 0206=2.06", 0287=2.875", 0456=4.562"**				Switch selection is application dependent – Contact Factory
Connection:	3 pin mini	5 pin mini	3 pin mini	144" PTFE Coated Flying Leads with 1/2" conduit hub	36" Potted-in PVC cable (most sizes also with 1/2" conduit hub)
Enclosure Rating:	IEC IP67	IEC IP67	NEMA 1, 2, 3, 4, 4x, 5, 6, 6P, 11, 12, 12K, 13	NEMA 1, 2, 3, 4, 4x, 5	NEMA 4, 4X, 6, 6P, 7, 9
LED indication:	Yes	Yes	Yes	No	No
Short Circuit Protection:	Yes	Yes	No	No	No
Weld Field Immunity:	Yes	Yes	Yes	Yes	Yes
Output:	2 wire, Normally Open with leakage current	Dual Output: DC Sinking and DC Sourcing, user selectable via wiring	SPDT (Single Pole Double Throw), Normally Open/ Normally Closed, Form C	SPDT (Single Pole Double Throw), Normally Open/ Normally Closed, Form C	SPDT (Single Pole Double Throw), Normally Open/ Normally Closed, Form C
Approvals/Marks:	CE, UL, CSA	CE, UL, CSA	UL or CSA[2]	UL or CSA[2]	UL or CSA[2]
Make/Break Location:	**0.13" from end of stroke, typical. Tolerance is +0/-0.13"**				–
Wiring Instructions:	Pin 1: AC Ground (Green) Pin 2: Output (Black) Pin 3: AC Line (White)	Pin 1: +10 to 30 VDC (White) Pin 2: Sourcing Output (Red) Pin 3: Grounded (not connected or required) Pin 4: Sinking Output (Orange) Pin 5: DC Common (Black)	Pin 1: Common (Green) Pin 2: Normally Closed (Black) Pin 3: Normally Open (White)	Common (Black) Normally Open (Blue) Normally Closed (Red)	Common (Black) Normally Open (Blue) Normally Closed (Red)
Cable: 6'	0853550006	0859170006	0853550006	–	–
Cable: 12'	0853550012	0859170012	0853550012	–	–
Cable: 6', Right Angle	0875470006	–	0875470006	–	–

[2]CSA available upon request – contact factory.

⚠PROP 65 WARNING **WARNING:** This product can expose you to chemicals including **Lead and Lead Compounds** which are known to the State of California to cause cancer and birth defects or other reproductive harm. For more information go to www.P65Warnings.ca.gov

How to Specify EPS Proximity Switches

Parker EPS proximity switches may be ordered on Series 2H, 2HD, 2HB & 3H, 3HD, 3HB cylinders as follows:

1) Complete the basic cylinder model number.

2) Place an "S" in the model number to denote switches and/or special features.

3) Mounting styles D, DB, JJ, J, or H should be used with caution because of possible mounting interferences. See Available Switch Position table below for additional details.

4) Special modifications to cylinders other than switches must have a written description.

5) Specify letter prefix "H" for EPS-7, "D" for EPS-6, and "F" for CLS-1, "B" for CLS-4 or "G" for CLS-2, then fill in the four blanks specifying port location, switch orientation and actuation point for both head and cap. If only one switch is used, place "XXXX" in the unused blanks.

Example = H13AGG-XXXX denotes a switch on the head end only, EPS-7

Example = XXXX-H42AGG denotes a switch on the cap end only, CLS-4

Head End

H	1	3	A	GG
Specify: "H" = EPS-7 "D" = EPS-6 "F" = CLS-1[1] "B" = CLS-4[1] "G" = CLS-2 "N" = Prep for EPS-6 and EPS-7 switches "P" = Prep for CLS-1 and CLS-4 switches "T" = Prep for CLS-2 switch	Port Location See Figure 1.	Switch Location See Figure 1.	Switch Orientation See Figure 2 for EPS-7, EPS-6, CLS-1 and CLS-4.	Actuation Point GG = End of Stroke FF = Stroke to Go[2]; See Bulletins 0840-G-E1, 2 or 3 for stroke remaining.

Cap End

H	4	2	A	GG
Specify: "H" = EPS-7 "D" = EPS-6 "F" = CLS-1[1] "B" = CLS-4[1] "G" = CLS-2 "N" = Prep for EPS-6 and EPS-7 switches "P" = Prep for CLS-1 and CLS-4 switches "T" = Prep for CLS-2 switch	Port Location See Figure 1.	Switch Location See Figure 1.	Switch Orientation See Figure 2 for EPS-7, EPS-6, CLS-1 and CLS-4.	Actuation Point GG = End of Stroke FF = Stroke to Go[2]; See Bulletins 0840-G-E1, 2 or 3 for stroke remaining.

Note: All specified switch and port locations are as seen from rod end of cylinder.

[1] CLS-1 and CLS-4 proximity switches are not available on the head end of 1.50" bore with 1.00" rod and 2.00" bore with 1.375" rod.

[2] FF Stroke to Go not available with CLS-2 switch.

Figure 1

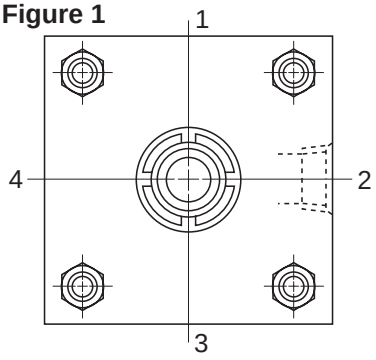

Available Mounting Positions[1] for EPS-6, EPS-7, CLS-1, CLS-4

MOUNTING STYLES		Bore Ø								
		1.50	2.00	2.50	3.25	4.00	5.00	6.00	7.00	8.00
T,TB,TC, TD,BB,DD, DE,SB,SE	HEAD	1,2,3,4	1,2,3,4	1,2,3,4	1,2,3,4	1,2,3,4	1,2,3,4	1,2,3,4	1,2,3,4	1,2,3,4
	CAP	1,2,3,4	1,2,3,4	1,2,3,4	1,2,3,4	1,2,3,4	1,2,3,4	1,2,3,4	1,2,3,4	1,2,3,4
J,D,JJ[2]	HEAD	1,3	1,3	1,3	1,3	1,3	1,3	1,3	1,3	1,3
	CAP	1,2,3,4	1,2,3,4	1,2,3,4	1,2,3,4	1,2,3,4	1,2,3,4	1,2,3,4	1,2,3,4	1,2,3,4
H,DB,HH	HEAD	1,2,3,4	1,2,3,4	1,2,3,4	1,2,3,4	1,2,3,4	1,2,3,4	1,2,3,4	1,2,3,4	1,2,3,4
	CAP	1,3	1,3	1,3	1,3	1,3	1,3	1,3	1,3	1,3
C[3]	HEAD	1	1	1	1	1	1	1,2,4	1,2,4	1,2,4
	CAP	1	1	1	1	1	1	1,2,4	1,2,4	1,2,4
F	HEAD	1	1	1,2,4	1,2,4	1,2,4	1,2,4	1,2,4	1,2,4	1,2,4
	CAP	1	1	1,2,4	1,2,4	1,2,4	1,2,4	1,2,4	1,2,4	1,2,4
JB	HEAD	NA	NA	NA	NA	1,2,3,4	1,2,3,4	1,2,3,4	1,2,3,4	1,2,3,4
	CAP	1,2,3,4	1,2,3,4	1,2,3,4	1,2,3,4	1,2,3,4	1,2,3,4	1,2,3,4	1,2,3,4	1,2,3,4
HB	HEAD	1,2,3,4	1,2,3,4	1,2,3,4	1,2,3,4	1,2,3,4	1,2,3,4	1,2,3,4	1,2,3,4	1,2,3,4
	CAP	NA	NA	NA	1,2,3,4	1,2,3,4	1,2,3,4	1,2,3,4	1,2,3,4	1,2,3,4

[1] Positions 1, 2, 3 and 4 are determined by viewing cylinder from piston rod end (See Figure 1). The electrical connector orientation may be restricted in some cases.

[2] On 1.50" - 5.00" bore Style JJ cylinders, switches will extend beyond mounting surface of cylinder.

[3] On 6.00" bore cylinders and larger switches mounted in position 2 or 4 will interfere with the installation and removal of mounting bolts.

Figure 2

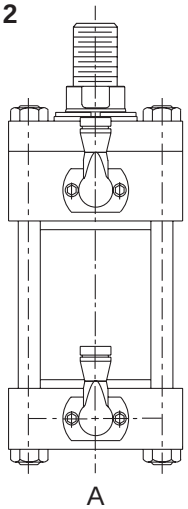

⚠PROP 65 WARNING **WARNING:** This product can expose you to chemicals including **Lead and Lead Compounds** which are known to the State of California to cause cancer and birth defects or other reproductive harm. For more information go to www.P65Warnings.ca.gov

Water Submersible Option for Series 2H, 2HD, 2HB and 3H, 3HD, 3HB Hydraulic Cylinders

Optional Polypak Inner and Outer Rod Seals resist internal and external pressure. Required for depths over 25 ft and up to 5000 ft.

Optional Dual Cylinder Body Seals resist external pressure. Required for depths over 25 ft and up to 5000 ft.

Optional 17-4 stainless steel tie rods and Bumax 88 stainless steel nuts resist corrosion.

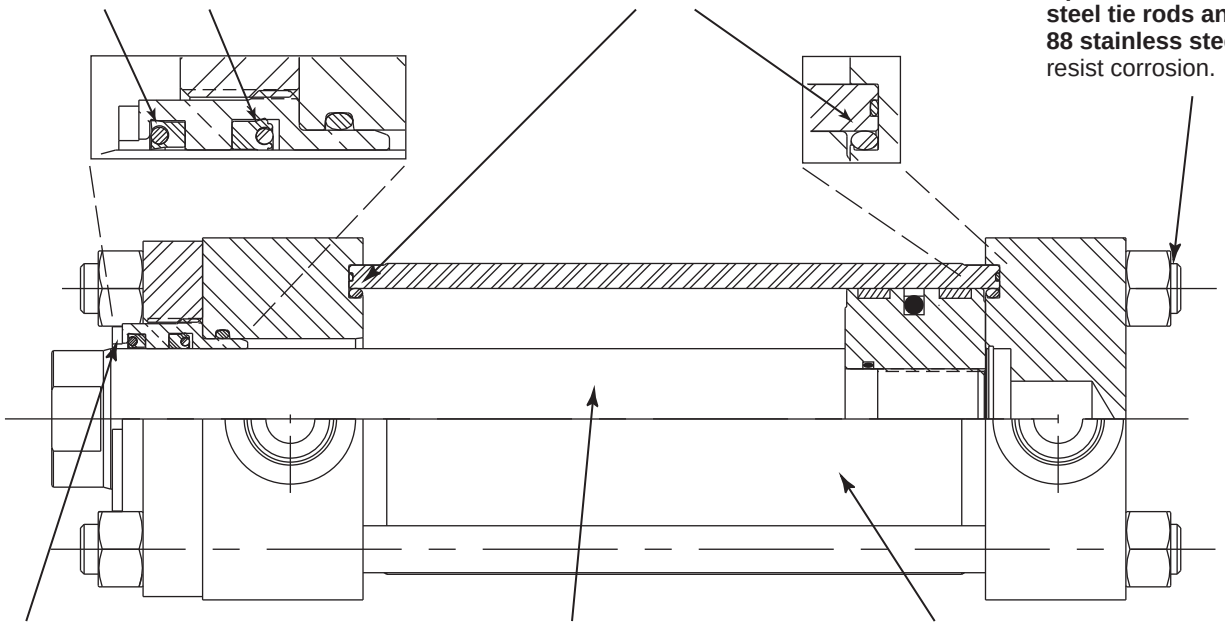

Bronze Rod Bushing

Standard 17-4 Heat-Treated, Chrome-Plated, High Tensile Stainless Steel Piston Rod Material resists corrosion.

Several surface treatment options are available for protection against operating environments.

Specifications:

- Submersion Depth: up to 5000 ft
- Heavy Duty Service – ANSI (NFPA) T3.6.7R2 – 1996 Specifications and Mounting Dimension Standards
- Nominal Pressure – 3000 psi
- Operating Temperature – -10°F to +165°F
- 17-4 PH chrome plated stainless steel piston rod
- Stainless steel name tag affixed with stainless steel wire around tie rod

Cylinder Seal Construction:

- Up to 25 ft – Standard rod seal and body seals
- Over 25 ft to 5000 ft
  - Subsea rod seal package that includes a Polypak oil seal and an outward facing Polypak wiper to seal against water intrusion.
  - Subsea body seal package with ID oil seal and body-end o-ring to seal against water intrusion.
  - Not available with 0.625 Ø piston rod

Standard Options for Water Submersible Cylinders:

Material

- 17-4 PH stainless steel tie rods and Bumax 88 stainless steel tie rod nuts
- Chrome plated body ID

Surface Treatments for Corrosion Protection

- Electroless nickel plated exterior (head, cap, body and retainer)
- Inorganic zinc primer (zinc primer only – without bond coating)
- Inorganic zinc primer with epoxy undercoat and anacrylic topcoat
- Epoxy undercoat and topcoat

Custom Options available for Special Order:

- End-of-Stroke Switches
- All stainless steel construction

⚠**PROP 65 WARNING** **WARNING:** This product can expose you to chemicals including **Lead and Lead Compounds** which are known to the State of California to cause cancer and birth defects or other reproductive harm. For more information go to www.P65Warnings.ca.gov

Water Submersible Option for Series 2H, 2HD, 2HB and 3H, 3HD, 3HB Hydraulic Cylinders

How to order:

1. Specify the complete Parker Cylinder Model Number.
2. Put an “S” in the model number to indicate a special cylinder.
3. Include the 3 digit Submersible Code.
4. For custom options, such as switches, provide a complete description or drawing of your requirements.

Submersible Code

When selecting the submersible option, an S must be placed in the Model Number. Select Submersible Code values for the required Submersion Depth, Cylinder Body, and Corrosion Protection. See the example Model Number below:

Feature	Code	Specification	For
Submersion Depth	1	Conventional rod gland and body seal design	Depths to 25 ft
	2	Submersible rod gland and dual cylinder body seals	Depths to 5000 ft
	3	Other	Specify depth / requirements
Cylinder Body	P	Plain ID	
	C	Chrome plated ID	
Corrosion Protection	1	Inorganic zinc primer	Splash & short term immersion service where equipment is top coated by the customer
	2	Inorganic zinc primer with stainless steel tie rods, nuts, & fasteners	
	3	Electroless nickel plated exterior with stainless steel tie rods, nuts, & fasteners	
	4	Inorganic zinc primer, epoxy undercoat, & anacrylic topcoat.	Splash & short term immersion service
	5	Inorganic zinc primer, epoxy undercoat, & anacrylic topcoat with stainless steel tie rods, nuts, & fasteners	
	6	Epoxy base & top coat.	Long term immersion service
	7	Epoxy base & top coat. with stainless steel tie rods, nuts, & fasteners	
	9	Other	Specify requirements

Example:

4.00 BB 2HK T S 14 X 24.00
S=Submersible Code: 2P1
(describes a 4" x 24" cylinder for submersion up to 5000 ft, with a plain cylinder body ID and Inorganic Zinc Primer corrosion protection.)

Water Submersible Codes and Features Supplied

Depths to 5000 ft[1]

Submersible Cylinder Feature	Water Submersible Code[1]													
	2P1	2P2	2P3	2P4	2P5	2P6	2P7	2C1	2C2	2C3	2C4	2C5	2C6	2C7
17-4 PH piston rod	X	X	X	X	X	X	X	X	X	X	X	X	X	X
Stainless steel tag	X	X	X	X	X	X	X	X	X	X	X	X	X	X
Submersible rod gland	X	X	X	X	X	X	X	X	X	X	X	X	X	X
Dual cylinder body seals	X	X	X	X	X	X	X	X	X	X	X	X	X	X
Chrome plated cylinder ID								X	X	X	X	X	X	X
SS tie rods, nuts, & fasteners		X	X		X		X		X	X		X		X
Electroless nickel plated exterior			X							X				
Inorganic zinc primer	X	X						X	X					
Inorganic zinc primer with topcoats				X	X						X	X		
Epoxy base & topcoat						X	X						X	X

[1] Corresponding submersible codes for depths to 25 ft begin with 1 (e.g. 1P1, 1P2, etc.) and include all of the features marked for 5000 ft depth ***except*** Submersible Rod Gland and Dual Cylinder Body Seals.

⚠PROP 65 WARNING **WARNING:** This product can expose you to chemicals including **Lead and Lead Compounds** which are known to the State of California to cause cancer and birth defects or other reproductive harm. For more information go to www.P65Warnings.ca.gov

Parker Buffer Seal's Unique Design

The Parker Buffer Seal Gland is recommended for heavy duty applications where pressure spikes on the rod side of the piston produce premature rod seal failure. Whether the pressure spikes are caused by an external force or

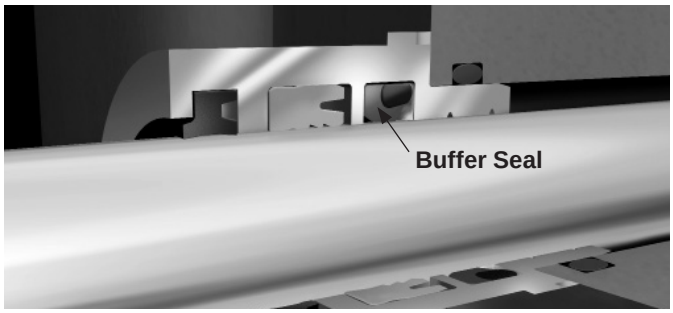

intensification due to differential piston areas, the resultant rod seal damage drives the need for more frequent unplanned service downtime.

Parker Buffer Seal is a secondary, upstream seal that protects the primary rod seal from damage caused by pressure spikes. The polyurethane Buffer Seal for Class 1 service and filled PTFE Buffer Seal for all other Seal Classes is o-ring energized, low friction and extrusion resistant.

The Parker Buffer Seal is a unique design that allows trapped pressure back into the cylinder. When the rod extends from the cylinder the Buffer Seal is riding on a high compression sealing point to limit leakage. On the retract stroke the seal rocks forward to allow trapped fluid to pass under the seal and return to the system.

Buffer Seals are available with Series 2HD/3HD and 2HB/3HB in 1.50"-8.00" bores. They are available with Seal Classes 1, 2, 3, 4, 5 & 6. Selection of the Buffer Seal is made with a code in the cylinder model number.

Rod Extension Dimensions for Buffer Seal Glands

Buffer Seal glands are from 0.31" to 0.81" longer (see table at right) than glands without a Buffer Seal. The longer gland causes the piston rod to extend beyond its location for a standard gland. A differentiating rod end style 4B vs. 4, 9B vs. 9 etc. must also be specified when selecting the Buffer Seal gland option. Rod end extension dimensions – V, VF, W, WF and WG – for Buffer Seal rod end styles are in the table at right. All other rod end dimensions are unchanged and can be found on the Piston Rod Ends page for each series.

Series 2HD/2HB & 3HD/3HB 7.00" & 8.00" Bore Rod End Styles

Style 4B – Small Male

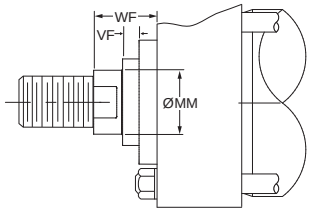

Style 8B – Intermediate Male

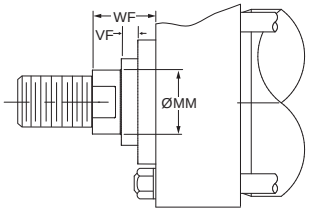

Style 9B – Short Female

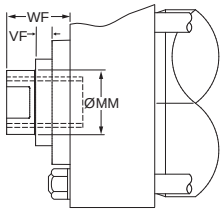

Style 55B – Flanged Rod End

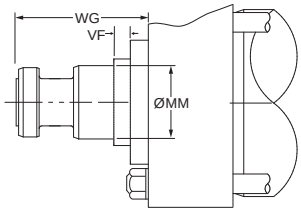

Rod End Dimensions

Bore Ø	Rod No.	MM Rod Ø	Gland Length Increase	V[1]	VF	W[1]	WF	WG[2]
1.50	1 (Std.)	0.625	Buffer Seal Not Available in 0.625" Rod					
	2	1.000	0.31	0.81	0.83	1.31	1.69	2.38
2.00	1 (Std.)	1.000	0.31	0.56	0.83	1.06	1.69	2.38
	2	1.375	0.38	0.75	1.02	1.38	2.00	2.75
2.50	1 (Std.)	1.000	0.31	0.56	0.83	1.06	1.69	2.38
	2	1.750	0.44	0.94	0.97	1.69	2.31	3.13
	3	1.375	0.38	0.75	1.02	1.38	2.00	2.75
3.25	1 (Std.)	1.375	0.38	0.63	1.02	1.25	2.00	2.75
	2	2.000	0.44	0.81	0.97	1.69	2.44	3.75
	3	1.750	0.44	0.81	0.97	1.56	2.31	3.13
4.00	1 (Std.)	1.750	0.44	0.69	0.97	1.44	2.31	3.13
	2	2.500	0.44	0.81	1.09	1.81	2.69	4.50
	3	2.000	0.44	0.69	0.97	1.56	2.44	3.75
5.00	1 (Std.)	2.000	0.44	0.69	0.97	1.56	2.44	3.75
	2	3.500	0.44	0.81	0.78	1.81	2.69	5.63
	3	2.500	0.44	0.81	1.09	1.81	2.69	4.50
	4	3.000	0.44	0.81	0.85	1.81	2.69	4.88
6.00	1 (Std.)	2.500	0.44	0.69	1.09	1.69	2.69	4.50
	2	4.000	0.44	0.69	0.78	1.69	2.69	5.75
	3	3.000	0.44	0.69	0.85	1.69	2.69	4.88
	4	3.500	0.44	0.69	0.78	1.69	2.69	5.63
7.00	1 (Std.)	3.000	0.44	1.06	0.84	1.69	2.69	4.88
	2	5.000	0.81	1.15	1.15	2.06	3.06	6.63
	3	3.500	0.44	1.07	0.78	1.69	2.69	5.63
	4	4.000	0.44	0.94	0.78	1.69	2.69	5.75
	5	4.500	0.44	0.94	0.78	1.69	2.69	6.50
8.00	1 (Std.)	3.500	0.44	1.06	0.78	1.69	2.69	5.63
	2	5.500	0.81	1.15	1.15	2.06	3.06	7.50
	3	4.000	0.44	0.94	0.78	1.69	2.69	5.75
	4	4.500	0.44	0.94	0.78	1.69	2.69	6.50
	5	5.000	0.81	1.15	1.15	2.06	3.06	6.63

1 'V' and "W' dimensions are for Mounting Styles J & JB and tie rod retained gland styles.

2 The 'WG' dimension for Buffer Seal Glands matches the 'WG' for standard glands.

⚠**PROP 65 WARNING** **WARNING:** This product can expose you to chemicals including **Lead and Lead Compounds** which are known to the State of California to cause cancer and birth defects or other reproductive harm. For more information go to www.P65Warnings.ca.gov

2HD/3HD & 2HB/3HB Buffer Seal Rod Gland Cartridge Kit and Rod Seal Kit Parts Identification

- Gland Cartridge Kits contain items 12, 13, 14, 40, 41 and 45 (43 in class 2, 5, and 6 kits only)
- Rod Seal Kits contain items 12, 13, 40, 41 and 45 (43 in class 2, 5 and 6 kits only)

Parts List — Buffer Seal Gland

Symbol	Description
12	Buffer Seal
13	Buffer Seal Energizer
14	Rod Gland
40	Rod Wiper
41	Rod Seal
43	Back-up Washer, rod seal
45	Gland O-Ring

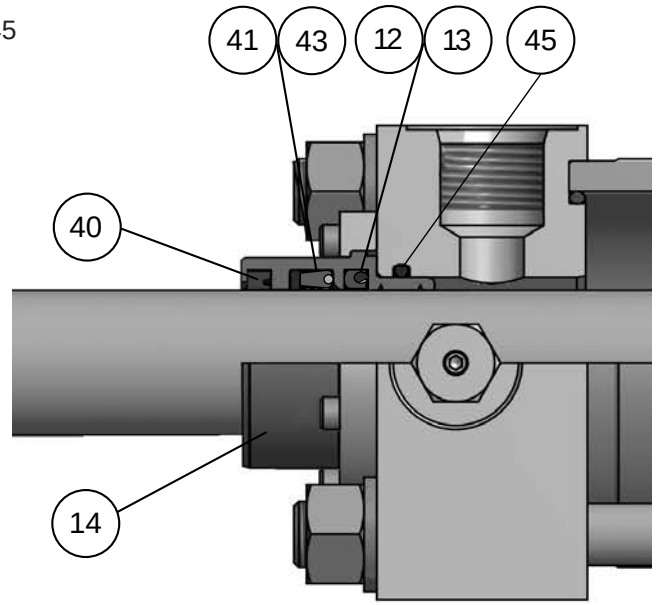

Series 2HD / 3HD & 2HB / 3HB
Buffer Seal Gland Cartridge Kits and Rod Seal Kits

Rod Ø	Seal Type									
	Class 1 Service (Polyurethane & Nitrile)		Class 2 Service (Nitrile)		Class 3 Service (EPR)		Class 5 Service (FKM)		Class 6 Service (Nitroxile)	
	Contains 1 ea. Sym.# 14, 40, 41 & 45		Contains 1 ea. Sym.# 14, 40, 41 & 45		Contains 1 ea. Sym.# 14, 40, 41 & 45		Contains 1 ea. Sym.# 14, 40, 41 & 45		Contains 1 ea. Sym.# 14, 40, 41 & 45	
	Gland Cartridge Kits	Rod Seal Kits[1]	Gland Cartridge Kits	Rod Seal Kits[1]	Gland Cartridge Kits	Rod Seal Kits[1]	Gland Cartridge Kits	Rod Seal Kits[1]	Gland Cartridge Kits	Rod Seal Kits[1]
0.625	RG2HDB0061	RK2HDB0061	RG2HDB0062	RK2HDB0062	RG2HDB0063	RK2HDB0063	RG2HDB0065	RK2HDB0065	RG2HDB0066	RK2HDB0066
1.000	RG2HDB0101	RK2HDB0101	RG2HDB0102	RK2HDB0102	RG2HDB0103	RK2HDB0103	RG2HDB0105	RK2HDB0105	RG2HDB0106	RK2HDB0106
1.375	RG2HDB0131	RK2HDB0131	RG2HDB0132	RK2HDB0132	RG2HDB0133	RK2HDB0133	RG2HDB0135	RK2HDB0135	RG2HDB0136	RK2HDB0136
1.750	RG2HDB0171	RK2HDB0171	RG2HDB0172	RK2HDB0172	RG2HDB0173	RK2HDB0173	RG2HDB0175	RK2HDB0175	RG2HDB0176	RK2HDB0176
2.000	RG2HDB0201	RK2HDB0201	RG2HDB0202	RK2HDB0202	RG2HDB0203	RK2HDB0203	RG2HDB0205	RK2HDB0205	RG2HDB0206	RK2HDB0206
2.500	RG2HDB0251	RK2HDB0251	RG2HDB0252	RK2HDB0252	RG2HDB0253	RK2HDB0253	RG2HDB0255	RK2HDB0255	RG2HDB0256	RK2HDB0256
3.000	RG2HDB0301	RK2HDB0301	RG2HDB0302	RK2HDB0302	RG2HDB0303	RK2HDB0303	RG2HDB0305	RK2HDB0305	RG2HDB0306	RK2HDB0306
3.500	RG2HDB0351	RK2HDB0351	RG2HDB0352	RK2HDB0352	RG2HDB0353	RK2HDB0353	RG2HDB0355	RK2HDB0355	RG2HDB0356	RK2HDB0356
4.000	RG2HDB0401	RK2HDB0401	RG2HDB0402	RK2HDB0402	RG2HDB0403	RK2HDB0403	RG2HDB0405	RK2HDB0405	RG2HDB0406	RK2HDB0406
4.500	RG2HDB0451	RK2HDB0451	RG2HDB0452	RK2HDB0452	RG2HDB0453	RK2HDB0453	RG2HDB0455	RK2HDB0455	RG2HDB0456	RK2HDB0456
5.000	RG2HDB0501	RK2HDB0501	RG2HDB0502	RK2HDB0502	RG2HDB0503	RK2HDB0503	RG2HDB0505	RK2HDB0505	RG2HDB0506	RK2HDB0506
5.500	RG2HDB0551	RK2HDB0551	RG2HDB0552	RK2HDB0552	RG2HDB0553	RK2HDB0553	RG2HDB0555	RK2HDB0555	RG2HDB0556	RK2HDB0556

[1]Rod seal kits do not include item 14.

⚠**PROP 65 WARNING** **WARNING:** This product can expose you to chemicals including **Lead and Lead Compounds** which are known to the State of California to cause cancer and birth defects or other reproductive harm. For more information go to www.P65Warnings.ca.gov

Modifications: The following modifications can be supplied on most Parker cylinders.

Metallic Rod Scraper

When specified metallic rod scrapers can be supplied instead of the standard polyurethane wiperseal. Recommended in applications where contaminants tend to cling to the extended piston rod and would damage the polyurethane wiperseal. Installation of metallic rod scraper does not affect cylinder dimensions. It is available at extra cost.

Parker Crown Wiper™ for Series 2HD / 2HB and 7.00" & 8.00" bore 3HD / 3HB

For environments that contain fine abrasive particulate specify the Crown Wiper option. The Crown Wiper is a proven superior alternative to piston rod end boots or metallic wipers that can ingest particulate. It has a sharp leading edge to effectively clean the piston rod and a beveled shape to prevent contaminant intrusion by channeling it away from the gland. It also acts as a secondary seal to wipe clean any oil film adhering to the rod on the extend stroke.

Standard Crown Wiper material for Seal Class 1 and 2 service is durable polyurethane. Optional FKM material is available for Class 5 service. The Crown Wiper requires a unique gland but does not change cylinder mounting dimensions

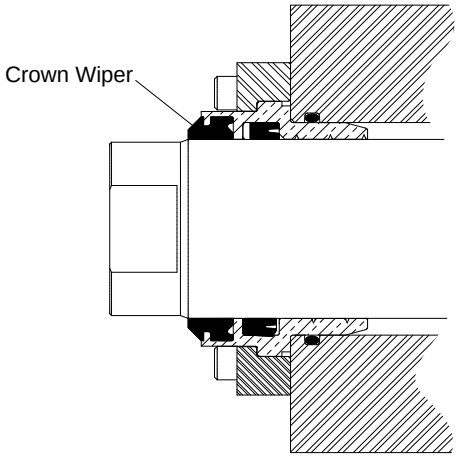

Crown Wiper Rod Gland Kits are available to retrofit existing 2HD / 2HB & 3HD / 3HB cylinders. See Section F Replacement Parts for details.

Rod End Boots

Cylinders have a hardened bearing surface on the piston rod to resist external damage, and are equipped with the high efficiency “Wiperseal” to remove external dust and dirt. Exposed piston rods that are subjected to contaminants with air hardening properties, such as paint, should be protected. In such applications, the use of a collapsing cover should be considered. This is commonly referred to as a “boot”. Calculate the longer rod end required to accommodate the collapsed length of the boot from the following data.

LF	.13	.13	.13	.13	.13	.13	.10	.10	.10	.10	.10
OD	2.25	2.63	3.00	3.38	3.75	4.38	5.13	5.63	6.25	7.00	7.50
MM	.625	1.000	1.375	1.750	2.000	2.500	3.000	3.500	4.000	5.000	5.500

To determine extra length of piston rod required to accommodate boot, calculate

BL = Stroke x LF + 1.13"

BL + Std. W or WF + A = length of piston rod to extend beyond the retainer.

NOTE: Check all Boot O.D’s against std. “E” dimension from catalog. This may be critical on foot mounted cylinders.

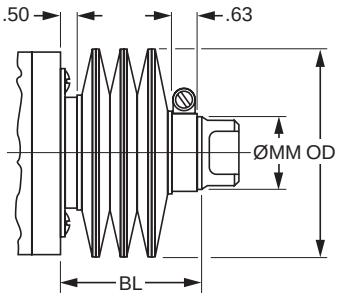

Gland Drain

Hydraulic fluids tend to adhere to the piston rods, during the extend stroke, and an accumulation of fluid can collect in the cavity behind the gland wiperseal on long stroke cylinders.

A 1/8" NPTF gland drain port can be provided in the gland retainer. A passage in the gland between the wiperseal and lipseal is provided to drain off any accumulation of fluid between the seals. See drawing below.

It is recommended that the gland drain port be piped back to the fluid reservoir and that the reservoir be located below the level of the head of the cylinder.

On 1.50" bore with 0.625" rod the drain port is located in the head adjacent to the port. The retainer thickness on 1.50" bore with 1.000" rod and gland drain is increased to 0.63". On 2.00"-8.00" bore sizes the drain port is located in the retainer as shown. On Style JJ with gland drain, the drain port is in the head.

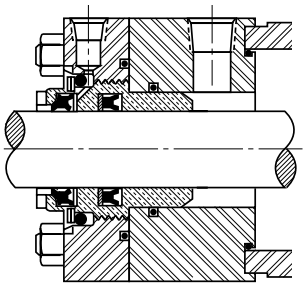

Air Bleeds

In most hydraulic circuits, cylinders are considered self-bleeding when cycled full stroke. If air bleeds are required and specified, 1/8" NPTF Air Bleed Ports for venting air can be provided at both ends of the cylinder body, or on the head or cap. To order, specify “Bleed Port”, and indicate position desired.

⚠**PROP 65 WARNING** **WARNING:** This product can expose you to chemicals including **Lead and Lead Compounds** which are known to the State of California to cause cancer and birth defects or other reproductive harm. For more information go to www.P65Warnings.ca.gov

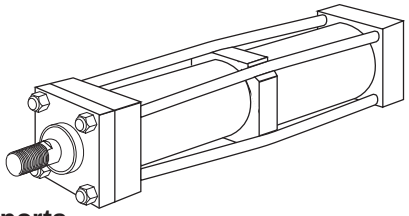

Tie Rod Supports

Rigidity of Envelope – Parker heavy duty hydraulic cylinders have advantages in rigidity within the limits of the cylinder tube to resist buckling. For long stroke tie rod cylinders, within practical limits, Parker provides Tie Rod Supports (see table below) that move the tie rod centerlines radially outward.

To avoid the need for Tie Rod Supports, specify Series 2HB non-tie rod style for long stroke applications.

Standard tie rod supports are kept within the envelope dimensions of the head and cap, and generally do not interfere with mounting a long cylinder.

Number of Supports Required	Bore Ø	Stroke (Inches)											
		36	48	60	72	84	96	108	120	132	144	156	168
	1.50	—	—	1	1	1	2	2	2	3	3	3	4
	2.00	—	—	—	1	1	1	1	2	2	2	2	3
	2.50	—	—	—	—	—	1	1	1	1	1	2	2
	3.25	—	—	—	—	—	—	—	1	1	1	1	1
	4.00	—	—	—	—	—	—	—	—	—	1	1	1

Note: 5.00" through 14.00" bore sizes — no supports required.

Stroke Adjusters

For the requirement where adjusting the stroke is specified. Parker has several designs to offer, one of which is illustrated below. This is suitable for infrequent adjustment and is economical[1].

Bore Ø	D	J	K	L (Max.)
1.50	1/2 - 20	0.31	0.94	5
2.00	3/4 - 16	0.44	1.25	8
2.50, 3.25	1 - 14	0.63	1.69	9
4.00	1 1/2 - 12	0.94	2.13	18
5.00	2 - 12	0.94	2.69	20
6.00	2 1/2 - 12	1.69	3.13	20
7.00	3 - 12	2.00	3.25	20
8.00	3 1/2 - 12	2.38	3.50	20

Here a "retracting stroke adjuster" must be called for in specifications, and the length *of the adjustment must be specified*.

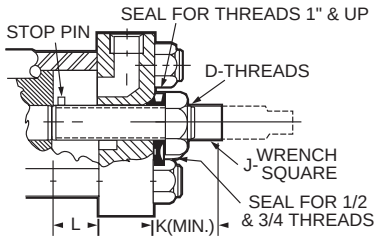

Where frequent adjustment or cushions at the cap end are required, other designs are available according to application needs.

[1] Infrequent is defined by positioning the retract stroke in a couple of attempts at original machine set up. The frequent stroke adjuster is recommended for adjustments required after the original equipment has been adjusted by the original machine manufacturer.

Thrust Key Mountings

Thrust key mountings eliminate the need of using fitted bolts or external keys on side mounted cylinders. Parker cylinders in mounting styles CP and FP can be provided with the gland retainer plate extended below the mounting side of the cylinder (see illustration below). This extended retainer plate can then be fitted into a keyway milled into the mounting surface of the machine member. This is referred to as the "P" Modification of any side mounting style.

Note: Please consult factory when replacing HD Series cylinders.

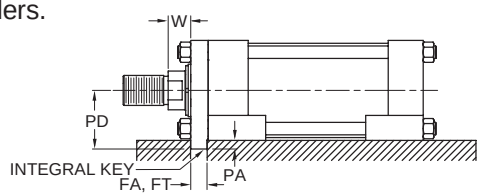

Bore Ø	FA (Series 2HD/ 3HD, 2HB/3HB)	FT (Series 2H/3H)	PA	PD Mtg. Styles CP & FP
1.50	.361 -.001 +.000	.312 -.002 +.000	0.19	1.44
2.00	.611 -.001 +.000	.562 -.002 +.000	0.31	1.81
2.50	.611 -.001 +.000	.562 -.002 +.000	0.31	2.06
3.25	.736 -.001 +.000	.687 -.003 +.000	0.38	2.63
4.00	.861 -.001 +.000	.812 -.003 +.000	0.44	2.94
5.00	.861 -.001 +.000	.812 -.003 +.000	0.44	3.69
6.00	.986 -.001 +.000	.937 -.003 +.000	0.50	4.25
7.00	.986 -.001 +.000	.937 -.003 +.000	0.50	4.75
8.00	.986 -.001 +.000	.937 -.003 +.000	0.50	5.25

Metric Piston Rod Thread

The table below lists the standard thread supplied when Piston Rod Thread type M is specified in the cylinder model code.

MM Rod Ø	Thread		A
	Style 8M CC	Styles 4M & 9M KK	
0.625	M12x1.5	M10x1.5	0.75
1.000	M22x1.5	M20x1.5	1.13
1.375	M30x2	M26x1.5	1.63
1.750	M39x2	M33x2	2.00
2.000	M45x2	M39x2	2.25
2.500	M56x2	M48x2	3.00
3.000	M68x2	M58x2	3.50
3.500	M76x2	M64x2	3.50
4.000	M95x2	M76x2	4.00
4.500	M110x2	M80x2	4.50
5.000	M110x2	M90x2	5.00
5.500	M130x2	M100x2	5.50
7.000	-	M125x4	7.00
8.000	-	M140x4	8.00
9.000	-	M160x4	9.00
10.000	-	M180x4	10.00

⚠ **PROP 65 WARNING** **WARNING:** This product can expose you to chemicals including **Lead and Lead Compounds** which are known to the State of California to cause cancer and birth defects or other reproductive harm. For more information go to www.P65Warnings.ca.gov

Global Shield™ Rod Coating Technology
A Dramatically Different Approach to Resisting Corrosion

Parker's **Global Shield** rod coating technology is specifically designed to address corrosion resistance requirements of challenging industrial applications. When compared to traditional rod coatings, **Global Shield** has the following advantages:

- **Significantly Improved Corrosion Resistance** from the single-layer, fully dense, submicron structure and the lack of micro cracks inherent to chrome plating.
- **Lower Friction**
- **Ductile and Tough** so when the rod bends, it does too
- **Engineered Hardness** (HRC 54 minimum) for wear-resistance

The **value** that you will receive from **Global Shield** includes:

- **Less Downtime** from reduced maintenance intervals (cylinder repairs and seal replacements)
- **Longer Seal Life** in corrosive environments
- **Lower Service Costs** since you won't need to replace the piston rod due to corrosion

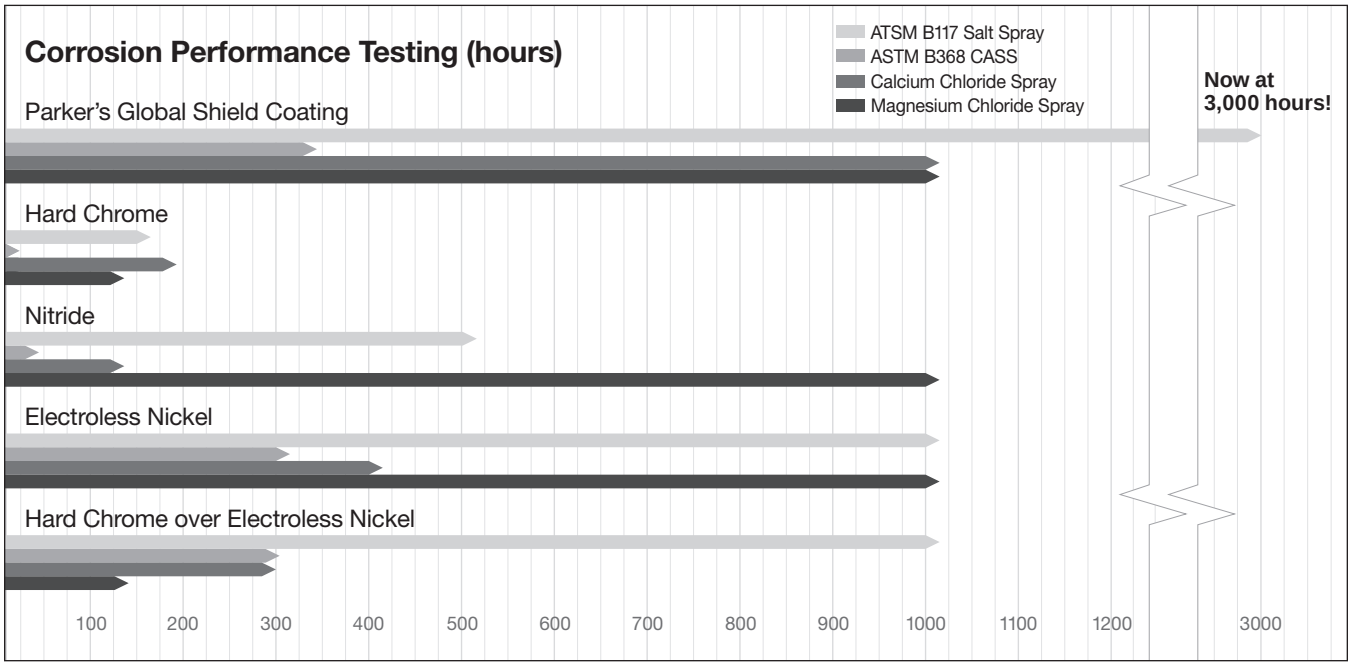

Performance Validated in the Lab and in the field

This breakthrough proprietary technology, owned and manufactured by Parker Hannifin Corporation, has been thoroughly tested in the lab and in the field to validate performance in the areas of corrosion and dynamic wear resistance. Cylinders protected with Parker's Global Shield coating have demonstrated resistance to corrosion up to 8x longer than conventional coatings. Tests also confirm leak-free performance even after 1 million cycles and 2,000 hours of salt spray.

Availability

- Rod diameters from ½" to 15"
- Rod lengths to 13 feet
- Standard thickness – 0.001"
  Up to 0.020" available; corrosion protection increases as the thickness increases
- Standard substrate – 1045/1050 carbon steel
  Other substrates available

How to Order

Enter an 'S' in the Special Modifications field of the model number and specify Global Shield Piston Rod Coating. Unless otherwise specified, standard 0.001" thickness will be supplied.

For additional Global Shield information see Bulletin HY08-0896.

⚠**PROP 65 WARNING** **WARNING:** This product can expose you to chemicals including **Lead and Lead Compounds** which are known to the State of California to cause cancer and birth defects or other reproductive harm. For more information go to www.P65Warnings.ca.gov

Section H

Engineering Data

Theoretical Push & Pull Forces, Cylinder Weights 166-168
Operating Fluids and Seals / Temperature Range 170
Fluids and Temperature Range / Pressure Ratings 171
Piston & Gland Friction / Piston Orifice 172-173
Ports, Stroke Data, Mounting Groups and Stop Tubing 174-177
Piston Rod Selection Data 178-180
Cushioning 181-186
Cylinder Safety Guide 188-189
Offer of Sale 190

⚠**PROP 65 WARNING** **WARNING:** This product can expose you to chemicals including **Lead and Lead Compounds** which are known to the State of California to cause cancer and birth defects or other reproductive harm. For more information go to www.P65Warnings.ca.gov

Theoretical Push Forces for Hydraulic Cylinders

Cylinder Bore Ø	Piston Area (Sq. In.)	Cylinder Push Stroke Force in Pounds at Various Pressures						
		100	250	500	1000	1500	2000	3000
1.50	1.77	177	443	885	1770	2651	3540	5310
2.00	3.14	314	785	1570	3140	4712	6280	9420
2.50	4.91	491	1228	2455	4910	7363	9820	14730
3.25	8.30	830	2075	4150	8300	12444	16600	24900
4.00	12.57	1257	3143	6285	12570	18850	25140	37710
5.00	19.64	1964	4910	9820	19640	29453	39280	58920
6.00	28.27	2827	7068	14135	28270	42412	56540	84810
7.00	38.49	3849	9623	19245	38490	57727	76980	115470
8.00	50.27	5027	12568	25135	50270	75398	100540	150810
10.00	78.54	7854	19635	39270	78540	117810	157080	235620
12.00	113.10	11310	28275	56550	113100	169650	226200	339300
14.00	153.94	15394	38485	76970	153940	230910	307880	461820
16.00	201.06	20106	50265	100530	201060	301590	402120	603180
18.00	254.47	25447	63620	127230	254470	381700	508940	763410
20.00	314.16	31416	78540	157080	314160	471240	628320	942480

General Formula

The cylinder output forces are derived from the formula:

$$F = P \times A$$

Where F = Force in pounds.

P = Pressure at the cylinder in pounds per square inch, gauge.

A = Effective area of cylinder piston in square inches.

⚠**PROP 65 WARNING** **WARNING:** This product can expose you to chemicals including **Lead and Lead Compounds** which are known to the State of California to cause cancer and birth defects or other reproductive harm. For more information go to www.P65Warnings.ca.gov

Theoretical Pull Forces for Hydraulic Cylinders

Cylinder Bore Ø	Piston Rod Ø	Piston Rod Area (Sq. In.)	Cylinder Pull Force in Pounds at Various Pressures (psi)						
			100	250	500	1000	1500	2000	3000
1.50	0.625	0.307	146	365	730	1460	2190	2920	4380
	1.000	0.785	98	245	491	982	1473	1964	2946
2.00	1.000	0.785	236	589	1178	2355	3533	4710	7065
	1.375	1.48	166	414	828	1655	2483	3310	4965
2.50	1.000	0.785	413	1031	2063	4125	6188	8250	12375
	1.375	1.48	343	856	1713	3425	5138	6850	10275
	1.750	2.41	250	625	1250	2500	3750	5000	7500
3.25	1.375	1.48	682	1704	3408	6815	10223	13630	20445
	1.750	2.41	589	1473	2945	5890	8835	11780	17670
	2.000	3.14	516	1290	2580	5160	7740	10320	15480
4.00	1.750	2.41	1016	2540	5080	10160	15240	20320	30480
	2.000	3.14	943	2358	4715	9430	14145	18860	28290
	2.500	4.91	766	1915	3830	7660	11490	15320	22980
5.00	2.000	3.14	1650	4125	8250	16500	24750	33000	49500
	2.500	4.91	1473	3683	7365	14730	22095	29460	44190
	3.000	7.07	1257	3143	6285	12570	18855	25140	37710
	3.500	9.62	1002	2505	5010	10020	15030	20040	30060
6.00	2.500	4.91	2336	5840	11680	23360	35040	46720	70080
	3.000	7.07	2120	5300	10600	21200	31800	42400	63600
	3.500	9.62	1865	4663	9325	18650	27975	37300	55950
	4.000	12.57	1570	3925	7850	15700	23550	31400	47100
7.00	3.000	7.07	3142	7855	15710	31420	47130	62840	94260
	3.500	9.62	2887	7218	14435	28870	43305	57740	86610
	4.000	12.57	2592	6480	12960	25920	38880	51840	77760
	4.500	15.90	2259	5648	11295	22590	33885	45180	67770
	5.000	19.63	1886	4715	9430	18860	28290	37720	56580
8.00	3.500	9.62	4065	10163	20325	40650	60975	81300	121950
	4.000	12.57	3770	9425	18850	37700	56550	75400	113100
	4.500	15.90	3437	8593	17185	34370	51555	68740	103110
	5.000	19.63	3064	7660	15320	30640	45960	61280	91920
	5.500	23.76	2651	6628	13255	26510	39765	53020	79530
10.00	4.500	15.90	6264	15660	31320	62640	93960	125280	187920
	5.000	19.63	5891	14728	29455	58910	88365	117820	176730
	5.500	23.76	5478	13695	27390	54780	82170	109560	164340
	7.000	38.48	4006	10015	20030	40060	60090	80120	120180
12.00	5.500	23.76	8934	22335	44670	89340	134010	178680	268020
	7.000	38.48	7462	18655	37310	74620	111930	149240	223860
	8.000	50.26	6284	15710	31420	62840	94260	125680	188520
14.00	7.000	38.48	11546	28865	57730	115460	173190	230920	346380
	8.000	50.26	10368	25920	51840	103680	155520	207360	311040
	10.000	78.54	7540	18850	37700	75400	113100	150800	226200
16.00	8.000	50.26	15080	37700	75400	150800	226200	301600	452400
	9.000	63.62	13744	34360	68720	137440	206160	274880	412320
	10.000	78.54	12252	30630	61260	122520	183780	245040	367560
18.00	9.000	63.62	19085	47713	95425	190850	286275	381700	572550
	10.000	78.54	17593	43983	87965	175930	263895	351860	527790
20.00	10.000	78.54	23562	58905	117810	235620	353430	471240	706860

⚠**PROP 65 WARNING** **WARNING:** This product can expose you to chemicals including **Lead and Lead Compounds** which are known to the State of California to cause cancer and birth defects or other reproductive harm. For more information go to www.P65Warnings.ca.gov

The weights shown below are for standard Series 2H / 2HD and 3H / 3HD hydraulic cylinders equipped with various diameter piston rods. To determine the net weights of a cylinder, first select the proper basic weight for zero stroke, then calculate the weight of the cylinder stroke and add the result to the basic weight. For extra rod extension use piston rod weights per inch shown in Table C. Weights of cylinders with intermediate rods may be estimated from table below by taking the difference between the piston rod weights per inch and adding it to the Code 1 weight for the cylinder bore size involved.

Table A Cylinder Weights, in pounds, for Series 2H / 2HD, 3H / 3HD (7.00" & 8.00") hydraulic cylinders

Bore Ø	Rod Ø	Rod Code	Single Rod Cylinders Basic Weight Zero Stroke		Add Per Inch of Stroke	Double Rod Cylinders Basic Weight Zero Stroke		Add Per Inch of Stroke
			F, H, HB, J, JB T, TB, TC, TD	BB, C, D, DB, DD, DE, HH, JJ, SB, SE		KF, KJ KJB KT, KTB, KTD	KC, KD, KDD, KDE, KJJ	
1.50	0.625	1	7.8	9.0	0.5	9.7	10.8	0.6
	1.000	2	8.4	9.3	0.6	9.1	10.7	0.8
2.00	1.000	1	11.6	13.2	0.8	14.6	16.8	1.0
	1.375	2	13.5	17.1	1.0	19.4	20.6	1.4
2.50	1.000	1	17.0	19.5	1.1	21.0	24.5	1.3
	1.750	2	22.5	25.5	1.5	27.0	30.0	2.2
3.25	1.375	1	32.0	41.0	1.8	43.0	52.0	2.2
	2.000	2	37.0	46.0	2.2	48.0	57.0	3.1
4.00	1.750	1	48.0	53.0	2.5	59.0	63.0	3.2
	2.500	2	52.0	58.0	3.2	92.0	97.0	4.6
5.00	2.000	1	76.0	82.0	3.4	96.0	102.0	4.8
	3.500	2	88.0	86.0	5.2	117.0	123.0	7.9
6.00	2.500	1	125.0	133.0	5.2	153.0	159.0	6.6
	4.000	2	133.0	140.0	7.3	182.0	190.0	10.9
7.00	3.000	1	233.0	242.0	6.7	320.0	339.0	8.7
	5.000	2	240.0	253.0	10.3	341.0	360.0	15.9
8.00	3.500	1	262.0	276.0	9.0	323.0	331.0	11.7
	5.500	2	300.0	309.0	13.0	390.0	411.0	19.7

Table B Cylinder Weights, in pounds, for Series 3H large bore hydraulic cylinders

Bore Ø	Rod Ø	Rod Code	Single Rod Cylinders Basic Weight Zero Stroke					Double Rod Cylinders	
			D, DB	DD, JJ, HH	JB, HB	BB, C	Add Per Inch of Stroke	Basic Weight Zero Stroke Add to All Mounting Styles	Add Per Inch of Stroke
10.00	4.500	1	562	646	684	607	15	43	20
	5.000	3	574	656	695	619	16	50	21
	5.500	4	583	667	705	628	17	64	24
	7.000	2	620	704	742	665	21	101	32
12.00	5.500	1	924	1057	1136	1000	22	64	29
	7.000	3	961	1094	1173	1036	26	101	37
	8.000	2	1022	1155	1234	1097	29	162	43
14.00	7.000	1	1335	1520	1582	1485	28	101	39
	8.000	3	1396	1581	1643	1546	31	162	45
	10.000	2	1496	1681	1743	1646	39	262	61

Bore Ø	Rod Ø	Rod Code	Single Rod Cylinders Basic Weight Zero Stroke				Double Rod Cylinders	
			JJ, HH	JB, HB	BB	Add Per Inch of Stroke	Basic Weight Zero Stroke Add to All Mounting Styles	Add Per Inch of Stroke
16.00	8.000	1	2073	2257	2226	35	149	49
	9.000	3	2122	2305	2275	39	198	57
	10.000	4	2181	2364	2334	43	257	65
18.00	9.000	1	3165	3256	3330	45	198	63
	10.000	3	3224	3315	3390	50	257	72
20.00	10.000	1	4231	4406	4551	57	257	79

Table C Extra weight for longer than standard rod extensions can be calculated from the table below.

Rod Ø	Piston Rod Weight Per Inch	Rod Ø	Piston Rod Weight Per Inch	Rod Ø	Piston Rod Weight Per Inch
0.625	0.09	2.500	1.40	5.000	5.56
1.000	0.22	3.000	2.00	5.500	6.72
1.375	0.42	3.500	2.72	7.000	10.89
1.750	0.68	4.000	3.56	8.000	14.22
2.000	0.89	4.500	4.51	10.000	22.23

⚠**PROP 65 WARNING** **WARNING:** This product can expose you to chemicals including **Lead and Lead Compounds** which are known to the State of California to cause cancer and birth defects or other reproductive harm. For more information go to www.P65Warnings.ca.gov

The weights shown below are for standard Series 2HB and 3HB hydraulic cylinders with various diameter piston rods. To determine the net weight of a cylinder, first select the proper basic weight for zero stroke, then calculate the weight of the cylinder stroke and add the result to the basic weight. For extra rod extension use piston rod weights per inch shown in Table B. Weights of cylinders with intermediate rods may be estimated from the table below by taking the difference between the piston rod weights per inch and adding it to the Code 1 weight for the cylinder bore size involved.

Table A Cylinder weights, in pounds, for Series 2HB and 3HB 7.00" - 8.00" hydraulic cylinders

Bore Ø	Rod Ø	Rod Code	Single Rod Cylinders Basic Weight Zero Stroke			Add Per Inch of Stroke	Double Rod Cylinders Basic Weight Zero Stroke		Add Per Inch of Stroke
			T	C, D, DB, DD, DE	BB, HH, JJ, SB, SE		KT	KC, KD, KDD, KDE, KJJ	
1.50	0.625	1	9.1	10.3	10.3	0.4	11.0	12.1	0.5
	1.000	2	9.7	10.6	10.6	0.5	10.4	12.0	0.7
2.00	1.000	1	13.6	15.2	15.3	0.6	16.6	18.9	0.8
	1.375	2	15.5	19.1	19.2	0.8	21.4	22.7	1.2
2.50	1.000	1	19.5	22.0	22.1	0.8	23.5	27.1	1.1
	1.750	2	25.0	28.0	28.1	1.3	29.5	32.6	2.0
3.25	1.375	1	37.3	46.3	46.5	1.4	48.3	57.5	1.8
	2.000	2	42.3	51.3	51.5	1.9	53.3	62.5	2.8
4.00	1.750	1	55.6	60.6	60.8	1.8	66.6	70.8	2.5
	2.500	2	59.6	65.6	65.8	2.6	99.6	104.8	4.0
5.00	2.000	1	92.1	98.1	98.8	2.7	112.1	118.8	3.6
	3.500	2	104.1	102.1	102.8	4.5	133.1	139.8	7.2
6.00	2.500	1	149.6	157.6	158.6	4.3	177.6	184.6	5.7
	4.000	2	157.6	164.6	165.6	6.5	206.6	215.6	10.0
7.00	3.000	1	271.1	280.1	281.9	5.3	358.1	378.9	7.3
	5.000	2	278.1	291.1	292.9	8.9	379.1	399.9	14.5
8.00	3.500	1	304.5	318.5	320.9	7.5	365.5	375.9	10.2
	5.500	2	342.5	351.5	353.9	11.5	432.5	455.9	18.2

Table B Extra weight for longer than standard rod extensions can be calculated from the table below.

Rod Ø	Piston Rod Weight Per Inch	Rod Ø	Piston Rod Weight Per Inch	Rod Ø	Piston Rod Weight Per Inch
0.625	0.09	2.000	0.89	4.000	3.56
1.000	0.22	2.500	1.40	4.500	4.51
1.375	0.42	3.000	2.00	5.000	5.56
1.750	0.68	3.500	2.72	5.500	6.72

⚠**PROP 65 WARNING** **WARNING:** This product can expose you to chemicals including **Lead and Lead Compounds** which are known to the State of California to cause cancer and birth defects or other reproductive harm. For more information go to www.P65Warnings.ca.gov

Operating Fluids and Temperature Range
Fluid Power cylinders are designed for use with pressurized air, hydraulic oil and fire resistant fluids, in some cases special seals are required.

Class 1 – Standard Seals
Class 1 seals are intended for use with fluids such as: air, nitrogen, mineral base hydraulic oil or MIL-H-5606 within the temperature range of -10°F (-23°C) to +165°F (+74°C). Generally they are nitrile except for piston rod seals in hydraulic cylinders. However the individual seals may be nitrile (Buna-N) enhanced polyurethane, polymyte, PTFE or filled PTFE.

Class 2 – Water Base Fluid Seals
Generally class 2 seals are intended for use with water base fluids within the temperature of -10°F (-23°C) to +165°F (+74°C) except for High Water Content Fluids (HWCF) in which case Class 6 seals should be used. Typical water base fluids are: Water, Water-Glycol, Water-in-Oil Emulsion, Houghto-Safe 27, 620, 5040, Mobil Pyrogard D, Shell Irus 905, Ucon Hydrolube J-4. These seals are nitrile.

Class 3 – Ethylene Propylene (EPR) Seals
Class 3 seals are intended for use with some Phosphate Ester Fluids between the temperatures of -10°F (-23°C) to +130°F (+54°C). Typical fluids compatible with EPR seals are Skydrol 500 and 700. EPR are Ethylene Propylene. Note: EPR seals are not compatible with mineral base hydraulic oil or greases. Even limited exposure to these fluids will cause severe swelling.

Class 4 – Low Temperature Nitrile Seals
Class 4 seals are intended for low temperature service with the same type of fluids as used with Class 1 seals within the temperature range of -50°F (-46°C) to +150°F (+66°C). Note: Certain fluids may react adversely with Class 4 seals compared to Class 1 seals.

Class 5 – Fluorocarbon (FKM) Seals
Class 5 seals are intended for elevated temperature service or for some Phosphate Ester Fluids such as Houghto-Safe 1010, 1055, 1120; Fyrquel 150, 220, 300, 350; Mobile Pyrogard 42, 43, 53, and 55. However, they are not compatible with Phosphate Ester Fluids such as Skydrols. Class 5 seals can operate with a temperature range of -10°F (-23°C) to +300°F (+149°C). For temperatures above +250°F (+121°C) the cylinder must be manufactured with non-studded piston rod and thread and a pinned piston to rod connection.

Class E – Fluorocarbon piston rod gland seals only
Intended for applications where only the rod gland is exposed to fluids or temperatures needing fluorocarbon compatibility.

Class 6 – HWCF Seals
Class 6 seals are intended for High Water Content Fluids (HWCF) such as Houghton, Hydrolubric 120B and Sonsol Lubrizol within the temperature range of +40°F (+4°C) to +120°F (+49°C). Class 6 seals are special nitrile compound dynamic seals. Because of the viscosity of these fluids, cylinders specified with class 6 seals, will also be modified to have straight cushions.

Class 8 – High Temperature Seals
Class 8 seals consist of filled PTFE piston seal, rod seals and wiperseal. They are intended for high temperature applications, to 400° F (204° C), where longer seal life and improved high temperature sealing performance is required. Minimum operating temperature is -15°F (-26°C). Body and gland o-ring seals will be fluorocarbon. Fluid resistance is comparable to Class 5. Cylinders incorporating Class 8 Seals will not have studded piston rods.

Class N – Class 8 piston rod gland seals only – all other seals are fluorocarbon Intended for applications where only the rod gland is exposed to fluids or temperatures needing filled PTFE seal compatibility.

Warning ⚠
The piston rod stud and the piston rod to piston threaded connections are secured with an anaerobic adhesive which is temperature sensitive. Cylinders are assembled with anaerobic adhesive having a maximum temperature rating of +250°F (+121°C). Cylinders specified with all other seal compounds (built before 1997) were assembled with anaerobic adhesive having a maximum operating temperature rating +165°F (+74°C). These temperature limitations are necessary to prevent the possible loosening of the threaded connections. Cylinders originally manufactured (before 1997) with class 1 seals (Nitrile) that will be exposed to ambient temperatures above +165°F (+74°C) must be modified for higher temperature service. Contact the factory immediately and arrange for the piston to rod and the stud to piston rod connections to be properly re-assembled to withstand the higher temperature service.

Water Service
Series 2H cylinders can be modified to make them more suitable for use with water as the operating medium. The modifications include chrome-plated cylinder bore; electroless nickel-plated head, cap and piston; chrome-plated 17-4 stainless steel piston rod; chrome plated cushion sleeve or cushion spear. Water and high water base fluid operated cylinders are best used on short stroke applications or where high pressure is applied only to clamp the load.

Warranty
Parker Hannifin will warrant cylinders modified for water or high water content fluid service to be free of defects in materials or workmanship, but cannot accept responsibility to premature failure due to excessive wear due to lack of lubricity or where failure is caused by corrosion, electrolysis or mineral deposits within the cylinder.

Seal Materials & Piston Seal Availability by Seal Class

Seal Materials & Piston Seal													
Seal Code	Description	Rod Wip-	Rod Seal		Piston Wear	Piston Seal Material &				Piston Seal	Piston Joint	Body End	Seal Back-
						HP	KP	RP	WP				
1	Standard	Ure-	Ure-	Ni-	Wear-	Yes	Yes	Yes	Yes	Nitrile	Ure-	Ure-	Nitrile
2	Water	Nitrile	Nitrile	Nitl-	Wear-	No	Yes	Yes	Yes	Nitrile	Nitrile	Nitrile	Nitrile

[1] Includes material of redundant quad ring seal for Parker WP Mixed Media Seal

⚠PROP 65 WARNING **WARNING:** This product can expose you to chemicals including **Lead and Lead Compounds** which are known to the State of California to cause cancer and birth defects or other reproductive harm. For more information go to www.P65Warnings.ca.gov

Fluids and Temperature Range

Class No.	Typical Fluids	Temperature Range
1 (Standard) (Nitrile Polyurethane)	Air, Nitrogen Hydraulic Oil, Mil-H-5606 Oil	-10°F (-23°C) to +165°F (+74°C)
2 Optional Water Base Fluid Seal	Water, Water-Glycol, HWCF — See Class 6 below. Water-in-Oil Emulsion Houghto-Safe, 271, 620, 5040. Mobil Pyrogard D, Shell Irus 905. Ucon Hydrolube J-4	-10°F (-23°C) to +165°F (+74°C)
3 Special (EPR) (at extra cost) Note: (EPR) seals are not compatible with Hydraulic Oil	Some Phosphate Ester Fluids Skydrol 500, 7000	-10°F (-23°C) to +130°F (+54°C)
4 Special (Nitrile) (at extra cost)	Low Temperature Air or Hydraulic Oil	-50°F (-46°C) to +150°F (+66°C)
5 Optional (at extra cost) (Fluorocarbon Seals) Note: Fluorocarbon seals are not suitable for use with Skydrol fluid, but can be used with hydraulic oil if desired.	High Temperature Houghto-Safe 1010, 1055, 1120 Fyrquel 150, 220, 300, 550 Mobil Pyrogard 42,43,53,55	See paragraph on Fluorocarbon seals for recommended temperature range.
6 Optional (HWCF) (at extra cost)	Houghton, Hydrolubric 120B Sonsol Lubrizol, for other HWCF — consult factory.	+40°F (+4°C) to +120°F (+49°C)
8 Optional (at extra cost) Energized PTFE	See Class 5 Seals	-15°F (-26°C) to +400°F (+204°C)

Application Data

The proper application of a fluid power cylinder requires consideration of the operating pressure, the fluid medium, the mounting style, the length of stroke, the type of piston rod connection to the load, thrust or tension loading on the rod, mounting attitude, the speed of stroke, and how the load in motion will be stopped. Information given here provides pressure rating data for Series 2H/2HD/2HB and 3H/3HD/3HB hydraulic cylinders.

Pressure Ratings

Standard operating fluid — clean, filtered hydraulic oil. Pressure ratings for heavy-duty hydraulic cylinders are shown in the table.

Series 2H/2HD/2HB and 3H/3HD hydraulic cylinders are recommended for pressures to 3000 psi for heavy-duty service with hydraulic oil. The 4:1 design factor ratings shown are based on tensile strength of material and are for standard rod diameter only. The rating is conservative for continuous severe applications. Design factors at other pressures can be calculated from this rating. In addition, mounting styles, stroke, etc., should be considered because of the limiting effect they may have on these ratings.

Heavy Duty Industrial Tie Rod Hydraulic Cylinders (depicted in this catalog)
Maximum Pressure Ratings

Bore Ø	Rod Ø	4:1[1] Design Factor (Tensile) (psi)	Heavy-Duty Service (psi)
1.50	0.625	2530	3000
2.00	1.000	2950	3000
2.50	1.000	2340	3000
3.25	1.375	2250	3000
4.00	1.750	2130	3000
5.00	2.000	2170	3000
6.00	2.500	2270	3000
7.00	3.000	2030	3000
8.00	3.500	2040	3000
10.00	4.500	2720	3000
12.00	5.500	2580	3000
14.00	7.000	2320	3000
16.00	8.000	2750	3000
18.00	9.000	2900	3000
20.00	10.000	2640	3000

[1] Applies to all mountings except Styles J, JB and H.

⚠ **PROP 65 WARNING** **WARNING:** This product can expose you to chemicals including **Lead and Lead Compounds** which are known to the State of California to cause cancer and birth defects or other reproductive harm. For more information go to www.P65Warnings.ca.gov

Piston Friction

Parker's new universal piston design provides not only superior sealing and wear performance, but also conserves operating energy with reduced running friction when compared to traditional sealing technologies. Running friction test results for the most popular seal configurations, HP Polyurethane Piston Seal and KP filled PTFE Piston Seal in 2.00", 4.00", 6.00" and 8.00" bores are shown in graphs below. Friction for intermediate bore sizes can be estimated using curves for bore sizes tested.

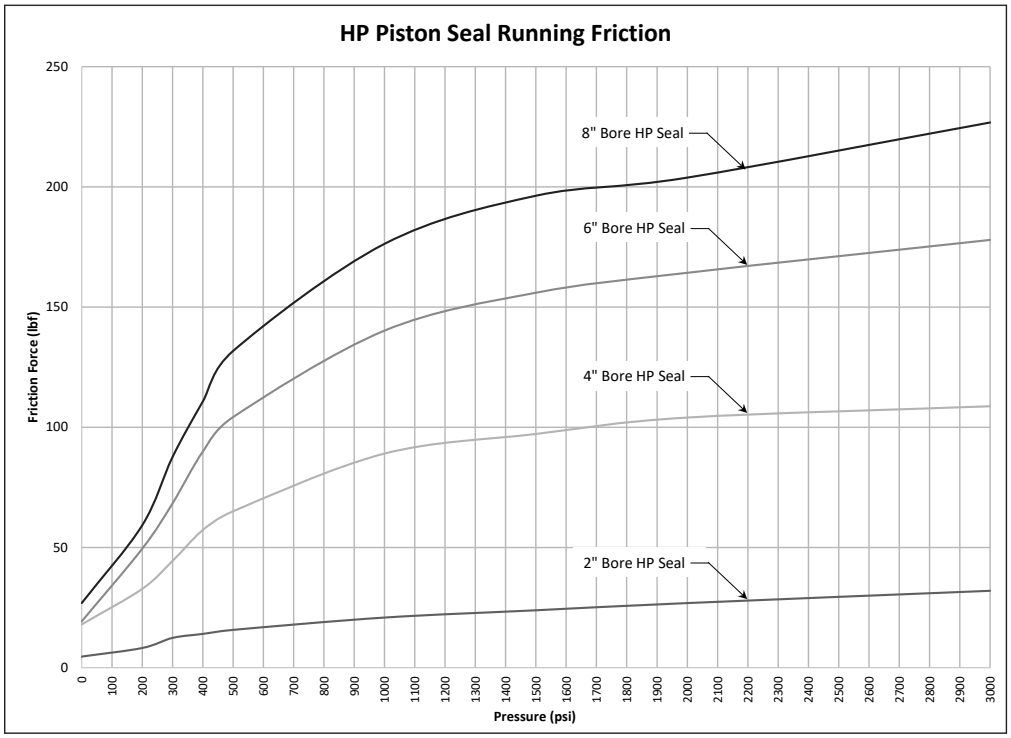

Parker HP Polyurethane Piston Seal

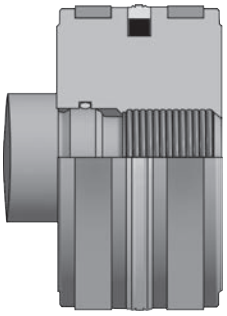

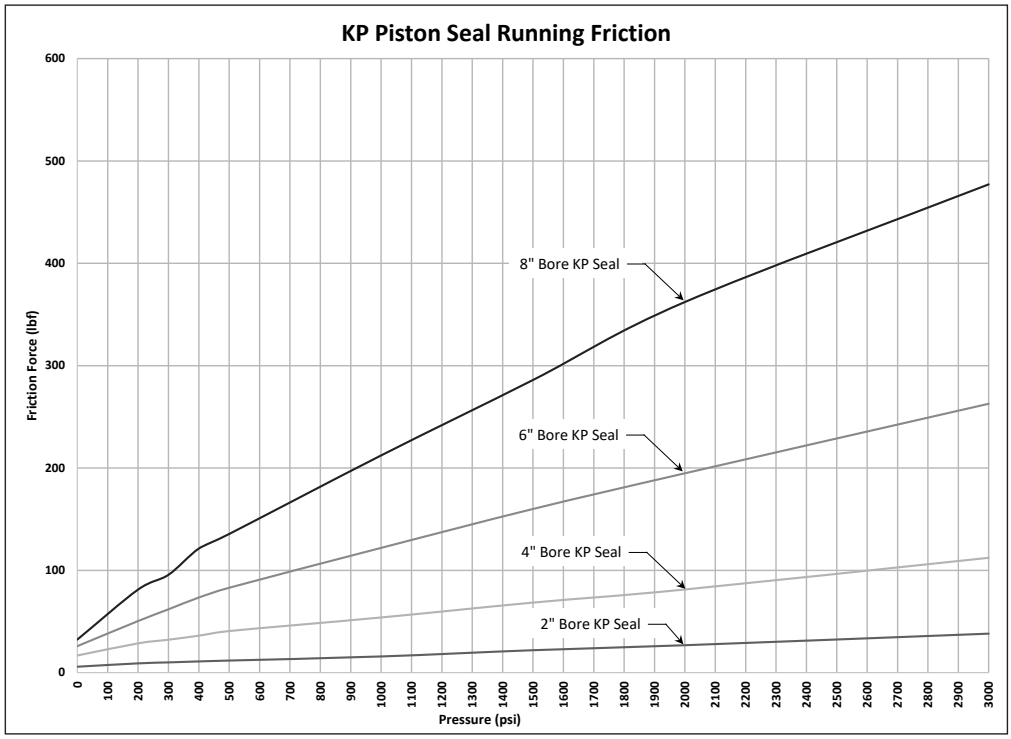

Parker KP Filled PTFE Piston Seal

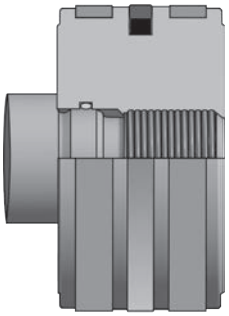

⚠**PROP 65 WARNING** **WARNING:** This product can expose you to chemicals including **Lead and Lead Compounds** which are known to the State of California to cause cancer and birth defects or other reproductive harm. For more information go to www.P65Warnings.ca.gov

Gland Friction

Gland friction is also a factor in cylinder operating efficiency and combined with piston seal friction will yield an overall cylinder running friction value. Running friction test results for 2H (TS2000) and 2HD / 2HB (Tri-Lip) lipseal glands and Low Friction glands in 1.000", 1.750", 2.500" and 5.000" piston rod diameters are shown in the graphs below. Friction for intermediate rod diameters can be estimated using curves for bore sizes tested.

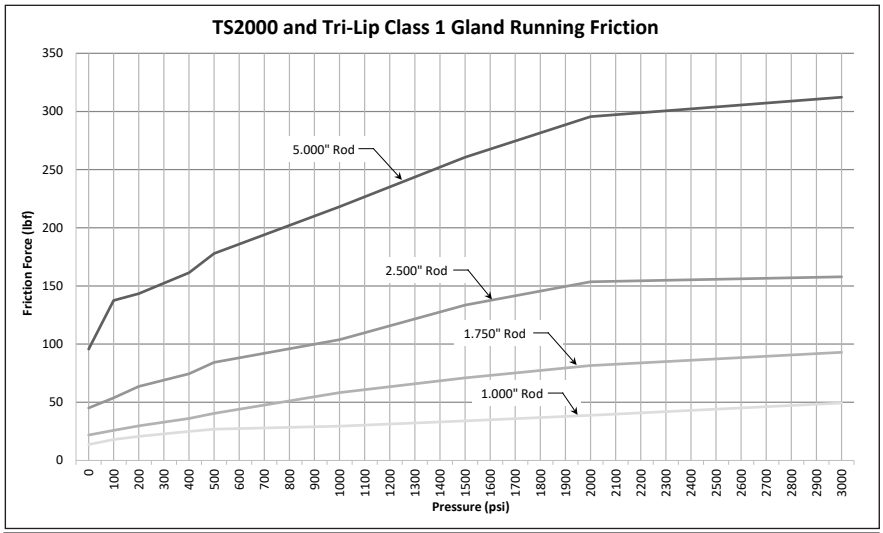

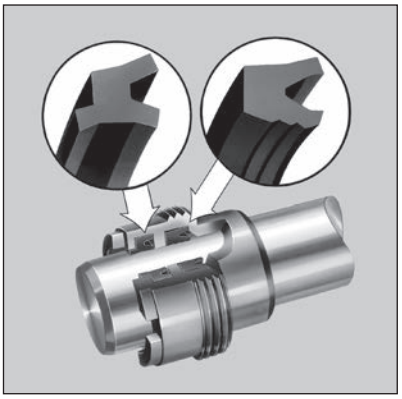

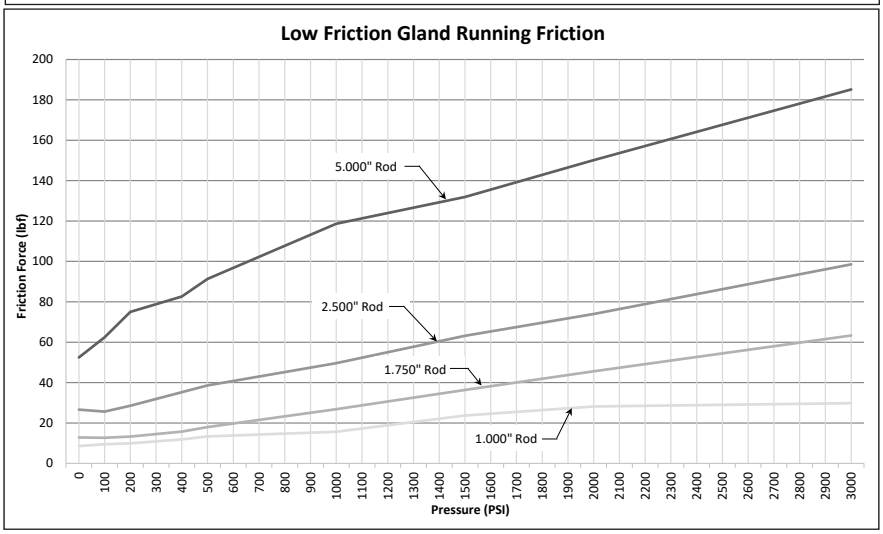

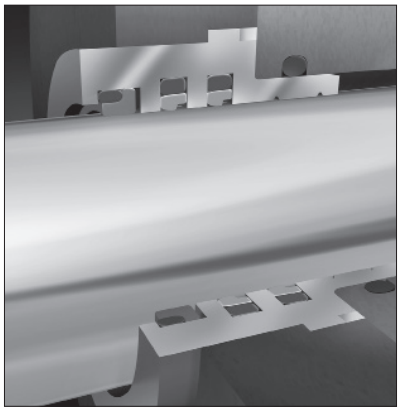

Piston Orifice

Parker's RP Thermoplastic piston seal is fully extrusion resistant and the choice for applications formerly served by cast iron rings. For some applications, cast iron rings are selected because of the inherent piston bypass. Where bypass is required for the RP seal (or any other universal piston seal style), a piston orifice option is available. There are three orifice diameters to choose from, 0.016", 0.024" and 0.032". Flow charts at right detail the bypass flow at various pressures for each orifice. Specify the orifice by placing an 'S' in the Special field of the model number and describe the orifice as in the following example: S = 0.024" Piston Orifice (insert desired orifice dia). Piston orifice not available in bores 1.50", 2.00" and 2.50" with rod codes 2 & 3.

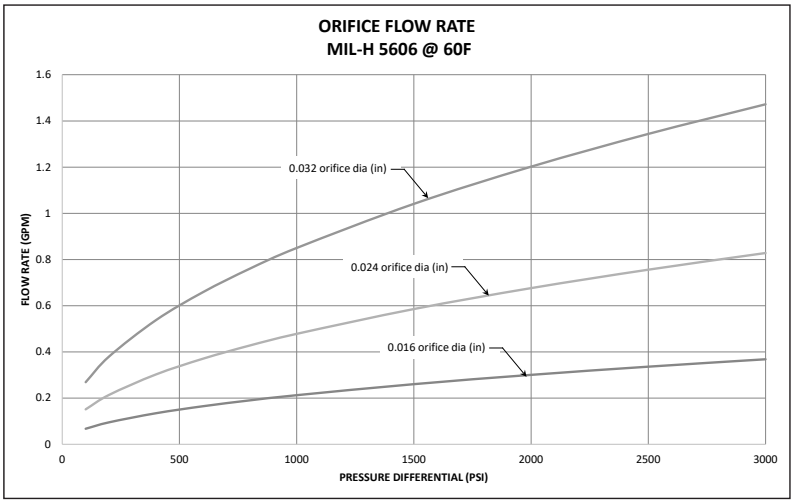

⚠PROP 65 WARNING **WARNING:** This product can expose you to chemicals including **Lead and Lead Compounds** which are known to the State of California to cause cancer and birth defects or other reproductive harm. For more information go to www.P65Warnings.ca.gov

Ports

Series 2H/2HD/2HB and 3H/3HD/3HB cylinders can be supplied with SAE straight O-ring ports or NPTF pipe thread ports. If specified on your order, extra ports can be provided on the sides of heads or caps that are not occupied by mountings or cushion valve.

Standard port location is position 1 as shown on line drawings in product catalog and Figure 1 below. Cushion adjustment needle and check valves are at positions 2 and 4 (or 3), depending on mounting style. Heads or caps which do not have an integral mounting can be rotated and assembled with ports at 90° or 180° from standard position. Mounting styles on which head or cap can be rotated at no extra charge are shown in Table A below. To order, specify by position number. In such assemblies the cushion adjustment needle and check valve rotate accordingly since their relationship with port position does not change.

Figure 1

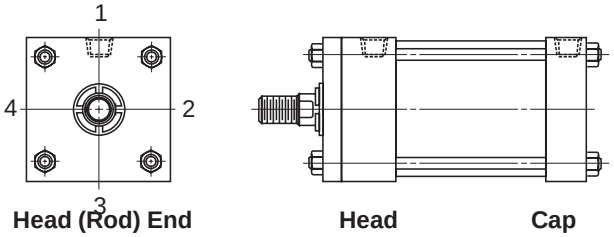

Table A

Mounting Style	Port Position Available	
	Head End	Cap End
TB, TC, TD, J, H, JB, HB, DD, DE	1, 2, 3 or 4	1, 2, 3 or 4
HH, DB, BB, SB, SE	1, 2, 3 or 4	1 or 3
JJ, D	1 or 3	1, 2, 3 or 4
C, F	1	1

Ports can be supplied at positions other than those shown in Table A at an extra charge. To order, specify port position as shown in Figure 1.

Straight Thread Ports

The SAE straight thread O-ring port is recommended for hydraulic applications. Parker will furnish this port configuration at positions shown in Table A. This port can also be provided at positions other than those shown in Table A at an extra charge. SAE port size numbers are listed next to the NPTF pipe thread counterparts for each bore size in the respective product catalogs. Size number, tube O.D., and port thread size for SAE ports are listed in Table B.

Table B — SAE Straight Thread O-Ring Ports

Size No.	Tube O.D. (In.)	Thread Size	Size No.	Tube O.D. (In.)	Thread Size
2	0.13	5/16 - 24	12	0.75	1 1/16 - 12
3	0.19	3/8 - 24	—	—	—
4	0.25	7/16 - 20	16	1.00	1 5/16 - 12
5	0.31	1/2 - 20	20	1.25	1 5/8 - 12
6	0.38	9/16 - 18	24	1.50	1 7/8 - 12
8	0.50	3/4 - 16	32	2.00	2 1/2 - 12
10	0.63	7/8 - 14	—	—	—

Note: For the pressure ratings of individual connectors, contact your connector supplier. Hydraulic cylinders applied with meter out or deceleration circuits are subject to intensified pressure at the cylinder piston rod end. The rod end pressure is approximately equal to:

$$\frac{\text{Effective Cap End Piston Area}}{\text{Effective Rod End Piston Area}} \times \text{Operating Pressure}$$

International Ports

Other port configurations to meet international requirements are available at extra cost. Parker Series 2H/2HD/2HB and 3H/3HD/3HB cylinders can be supplied, on request, with British standard taper port (BSPT). Such port has a taper of 1 in 16 measured on the diameter ($^1/_{16}$" per inch). The thread form is Whitworth System, and size and number of threads per inch are as follows:

Table C — British Standard Pipe Threads

Nominal Pipe Size	No. Threads Per Inch	Pipe O.D.
1/8	28	0.383
1/4	19	0.518
3/8	19	0.656
1/2	14	0.825
3/4	14	1.041
1	11	1.309
1 1/4	11	1.650
1 1/2	11	1.882
2	11	2.347

British standard parallel internal threads are designated as BSPP and have the same thread form and number of threads per inch as the BSPT type and can be supplied, on request, at extra cost. Unless otherwise specified, the BSPP or BSPT port size supplied will be the same nominal pipe size as the NPTF port for a given bore size cylinder.

Metric ports can also be supplied to order at extra cost. See table below for standard port size for each bore.

Table D – Standard Port Sizes

Bore Ø	T SAE	U NPTF	P SAE Code 61 Flange	Y ISO 6149	B BSPT R BSPP	G Metric
1.50	10	1/2	N/A	M22 x 1.5	1/2	M22 x 1.5
2.00	10	1/2	N/A	M22 x 1.5	1/2	M22 x 1.5
2.50	10	1/2	1/2[1]	M22 x 1.5	1/2	M22 x 1.5
3.25	12	3/4	3/4	M27 x 2	3/4	M27 x 2
4.00	12	3/4	3/4	M27 x 2	3/4	M27 x 2
5.00	12	3/4	3/4	M27 x 2	3/4	M27 x 2
6.00	16	1	1	M33 x 2	1	M33 x 2
7.00	20	1 1/4	1 1/4	M42 x 2	1 1/4	M42 x 2
8.00	24	1 1/2	1 1/2	M48 x 2	1 1/2	M48 x 2
10.00	24	2	2	M48 x 2	2	M48 x 2
12.00	24	2 1/2	2 1/2	M48 x 2	2 1/2	M48 x 2
14.00	24	2 1/2	2 1/2	M48 x 2	2 1/2	M48 x 2
16.00-20.00	24	–	3	–	–	–

[1]Available with 1.000 inch rod diameter only.

⚠PROP 65 WARNING **WARNING:** This product can expose you to chemicals including **Lead and Lead Compounds** which are known to the State of California to cause cancer and birth defects or other reproductive harm. For more information go to www.P65Warnings.ca.gov

Oversize Ports

Oversize NPTF or SAE straight thread ports can be provided, at an extra charge. For ports one size larger than standard, welded port bosses which protrude from the side of the head or cap are supplied. For dimensions, see drawings and tables below. Series 2H/2HD/2HB and 3H/3HD/3HB cylinders equipped with cushions at the cylinder cap end can sustain damage to the cushion check valve (cushion bushing) if excessive oil flow enters the cylinder from the cap end port. Cylinders which are equipped with cap end cushions and ordered with one size oversize ports having hydraulic fluid velocity exceeding 25 ft./sec. in the line entering the cap end of the cylinder should be ordered with a “solid cushion” at cap end. All cylinders ordered with double oversize ports should always be ordered with a “solid cushion” at cap end.

Cylinders which are connected to a meter out flow control with flow entering the cap end of a cylinder provided by an accumulator may also experience damage to the cushion bushing due to high instantaneous fluid flows. This condition can be eliminated by using a meter in flow control or “solid cushions” at cap end.

Oversize NPTF Port Boss Dimensions

Bore Ø	EE (NPTF)	A Ø	B	C	D	P
1.50	3/4	1.38	1.00	0.75	0.78	2.91
2.00	3/4	1.38	1.00	0.75	0.78	2.91
2.50	3/4	1.38	1.00	0.75	0.78	3.03
3.25	1	1.75	1.19	0.91	0.88	3.53
4.00	1	1.75	1.19	0.91	0.88	3.78
5.00	1	1.75	1.19	0.91	0.88	4.28
6.00	1 1/4	2.25	1.31	1.13	1.13	5.13
7.00	1 1/2	2.50	1.56	1.38	1.38	5.75
8.00	2	3.00	1.69	1.50	1.50	6.50

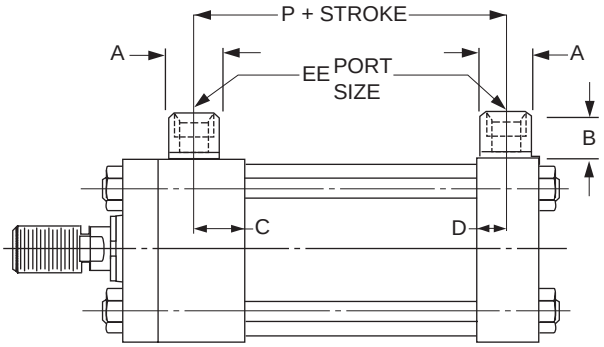

Oversize SAE Straight Thread Port Boss Dimensions

Bore Ø	EE (SAE)		A Ø	B	C	D	P
	2H	2HD					
1.50	12[1]	12	1.38	1.00	0.81	0.78	2.97
2.00	12[1]	12	1.38	1.00	0.81	0.78	2.97
2.50	12[2]	12[3]	1.38	1.00	0.81	0.81	3.13
3.25	16	16	1.75	1.19	0.91	0.91	3.56
4.00	16	16	1.75	1.19	0.91	0.91	3.81
5.00	16	16	1.75	1.19	0.91	0.91	4.31
6.00	20[2]	20[2]	–	–	1.13	1.17	5.19
7.00	24[2]	24[2]	–	–	–	–	5.63
8.00	N/A	N/A	–	–	–	–	6.38

[1] Port tapped directly in head with code 1 rod these bores.

[2] Port tapped directly in head (all rod codes) and cap these bores.

[3] Port tapped directly in cap this bore.

Flange Ports (Code 61, 3000 psi) SAE 4 Bolt Flange Ports

Bore Ø	Rod No.	SAE Dash No.	A Ø	AA	GG	P	Q	W	X	Y	Z
2.50[4,5]	1	8	.50	.81	.69	3.00	1.50	.75	.34	2.38	5/16 - 18
3.25[4]	1	12	.75	.75	.87	3.50	1.87	.94	.44	2.75	3/8 - 16
	2									3.13	
	3									3.00	
4.00[4]	1	12	.75	.75	.87	3.75	1.87	.94	.44	3.00	3/8 - 16
	2									3.38	
	3									3.13	
5.00[4]	1	12	.75	.75	.87	4.25	1.87	.94	.44	3.13	3/8 - 16
	2									3.38	
	3									3.38	
	4									3.38	
6.00	All	16	1.00	.87	1.03	4.87	2.06	1.03	.52	3,50	3/8 - 16
7.00	All	20	1.25	1.00	1.19	5.50	2.31	1.16	.59	3.75	7/16 - 14
8.00	All	24	1.50	1.06	1.41	6.25	2.75	1.37	.70	3.88	1/2 - 13

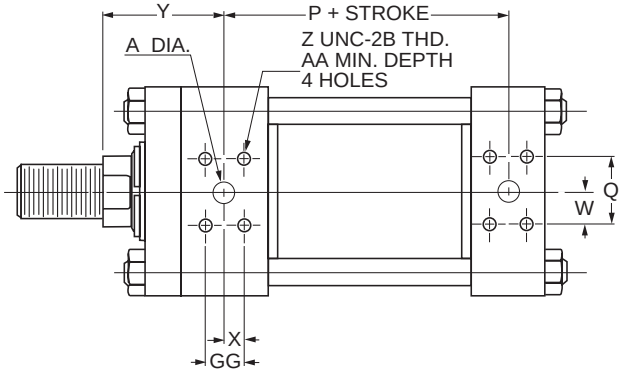

[4] 2.50", 3.25", 4.00" & 5.00" bores cap-flange port not available on Style HB. Style H not available at position 2 or 4. Port flange overhangs cap on Style HH. [5] 2.50" bore head flange port available with 1.000" rod only.

⚠PROP 65 WARNING **WARNING:** This product can expose you to chemicals including **Lead and Lead Compounds** which are known to the State of California to cause cancer and birth defects or other reproductive harm. For more information go to www.P65Warnings.ca.gov

Stroke Data

Parker cylinders are available in any practical stroke length. The following information should prove helpful to you in selecting the proper stroke for your cylinder application.

Stroke Tolerances

Stroke length tolerances are required due to buildup of tolerances of piston, head, cap and cylinder tube. Standard production of stroke tolerances run +.031" to -.015" up to 20" stroke, +.031" to -.020" for 21" to 60" and +.031" to -.031" for greater than 60" stroke. For closer tolerances on stroke length, it is necessary to specify the required tolerance plus the pressure and temperature at which the cylinder will operate. Stroke tolerances smaller than .015" are not generally practical due to elasticity of cylinders. If machine design requires such close tolerances, use of a stroke adjuster may achieve the desired result.

Mounting Groups

Standard mountings for fluid power cylinders fall into three basic groups. The groups can be summarized as follows:

Group 1 Straight Line Force Transfer with fixed mounts which absorb force on cylinder centerline.

Group 2 Pivot Force Transfer. Pivot mountings permit a cylinder to change its alignment in one plane.

Group 3 Straight Line Force Transfer with fixed mounts which do not absorb force on cylinder centerline.

Because a cylinder's mounting directly affects the maximum pressure at which the cylinder can be used, the chart below should be helpful in selection of the proper mounting combination for your application. Stroke length, piston rod connection to load, extra piston rod length over standard, etc., should be considered for thrust loads. Alloy steel mounting bolts are recommended for all mounting styles, and thrust keys are recommended for Styles C and F.

Group 1 FIXED MOUNTS which absorb force on cylinder centerline.	
	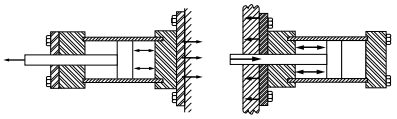
Heavy-Duty Service For Thrust Loads For Tension Loads	Styles HB, HH, TC Styles JB, JJ, TB
Medium-Duty Service For Thrust Loads For Tension Loads	Styles H, HB Styles J, JB
Light-Duty Service For Thrust Loads For Tension Loads	Style H Style J
Group 2 PIVOT MOUNTS which absorb force on cylinder centerline.	
	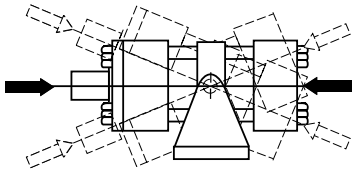
Heavy-Duty Service For Thrust Loads For Tension Loads	Styles DD, D, DE, SE Styles BB, DD, D, DB, DE, SE
Medium-Duty Service For Thrust Loads For Tension Loads	Styles BB, SB Styles BB, SB
Group 3 FIXED MOUNTS which do not absorb force on the centerline.	
	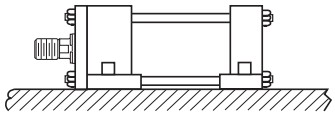
Heavy-Duty Service For Thrust Loads For Tension Loads	Styles C, CP Styles C, CP
Medium-Duty Service For Thrust Loads For Tension Loads	Styles F, FP Styles F, FP

Double Rod End Cylinders

The piston connection to rod #1 (without 'V' notch) of 1.50"-8.00" bore double rod end heavy duty hydraulic cylinders is pre-stressed for maximum fatigue life. For this reason the load should always be attached to the rod without 'V' notch. Extension rod #2 with 'V' notch is threaded to rod #1 and is recommended for non-load bearing attachment only.

For thrust (compression) load applications where the mounting style end of a double rod end cylinder is opposite the rod connected to the load it should be specified as a cap mounting style. For example, a head trunnion mounting style opposite the rod connected to the load should be specified as DB. This will ensure that the rod end without 'V' notch will be oriented opposite the head trunnion end. See the table below for guidance in selecting mounting styles that fit this criteria.

Double Rod End Mounting Styles

Mounting Styles for Single Rod Models	Mounting Styles for Corresponding Double Rod Models with the Load Connected To Rod Opposite Cylinder Mounting End
TB	KTC
J	KH
JB	KHB
JJ	KHH
D	KDB

Double Rod Cylinder

Style K

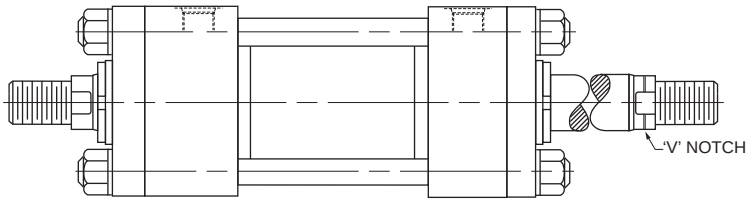

⚠PROP 65 WARNING **WARNING:** This product can expose you to chemicals including **Lead and Lead Compounds** which are known to the State of California to cause cancer and birth defects or other reproductive harm. For more information go to www.P65Warnings.ca.gov

Stop Tubing

Stop tube is recommended to lengthen the distance between the rod bearing and piston bearing to reduce bearing loads on long push stroke cylinders when the cylinder is fully extended. This is especially true of horizontally mounted cylinders. As part of the piston assembly and positioned between the piston and head, a stop tube restricts the extended position of the rod using the increased distance to achieve additional stability.

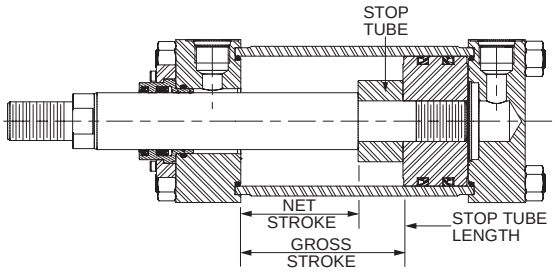

Use the following steps to determine the need for stop tube and, if required, how long it should be.

1. Examine the groups of cylinder illustrations below and determine which mounting and rod guiding group type match the required cylinder application.
2. Establish the Basic Length (L), with the piston rod fully extended, for the selected illustration by using the dimensional tables on previous pages of this catalog. For pivot mounted cylinders, the pin-to-pin dimension with the piston rod fully extended must be used. Regardless of mounting style, be sure to include any extended piston rod length beyond the catalog standard.
3. In the Stop Tube Table select the column for the appropriate mounting style and rod end guiding type. In the Basic Length (L) column, find the row with the range that includes the value calculated in Step 2. The next respective column to the right has the required length of stop tube.

Note: Mounting Styles BB, DB, H, HB, HH, SB and SE are mounted horizontally should also be checked for turning moments and loads between the rod bearing and piston to ensure they are not excessive. Weight of oil must be included in determining bearing loads.

When specifying cylinders with stop tube be sure to call out the net stroke and the length of the stop tube. Machine design can be continued without delay by laying in a cylinder equivalent in length to the NET STROKE PLUS STOP TUBE LENGTH, which is referred to as GROSS STROKE.

Stop Tube Length vs Basic Length (L)

Pivot Mounts (BB, D, DB, DD, DE, SB and SE)		**Fixed Mounts (C, F, H, HB, HH, J, JB, JJ, TB, TC, TD)**					
Pivoted and Rigidly Guided Rod End		**Fixed & Rigidly Guided Rod End**		**Pivoted & Rigidly Guided Rod End**		**Unguided Rod End**	
Basic Length (L)	**Stop Tube Length**	**Basic Length (L)**	**Stop Tube Length**	**Basic Length (L)**	**Stop Tube Length**	**Basic Length (L)**	**Stop Tube Length**
0 - 40	0	0 - 80	0	0 - 57	0	0 - 20	0
41 - 50	1	81 - 100	1	58 - 71	1	21 - 25	1
51 - 60	2	101 - 120	2	72 - 86	2	26 - 30	2
61 - 70	3	121 - 140	3	87 - 100	3	31 - 35	3
71 - 80	4	141 - 160	4	101 - 114	4	36 - 40	4
81 - 90	5	161 - 180	5	115 - 129	5	41 - 45	5
91 - 100	6	181 - 200	6	130 - 143	6	46 - 50	6
101 - 110	7	201 - 220	7	144 - 157	7	51 - 55	7
111 - 120	8	221 - 240	8	158 - 171	8	56 - 60	8
121 - 130	9	241 - 260	9	172 - 186	9	61 - 65	9
131 - 140	10	261 - 280	10	187 - 200	10	66 - 70	10
141 - 150	11	281 - 300	11	201 - 214	11	71 - 75	11
151 - 160	12	Consult Factory		215 - 229	12	76 - 80	12
161 - 170	13			230 - 243	13	81 - 85	13
171 - 180	14			244 - 257	14	86 - 90	14
181 - 190	15			258 - 271	15	91 - 95	15
191 - 200	16			272 - 286	16	96 - 100	16
201 - 210	17			287 - 300	17	101 - 105	17
211 - 220	18			Consult Factory		106 - 110	18
221 - 230	19					111 - 115	19
231 - 240	20					116 - 120	20
241 - 250	21					121 - 125	21
251 - 260	22					126 - 130	22
261 - 270	23					131 - 135	23
271 - 280	24					136 - 140	24
281 - 290	25					141 - 145	25
291 - 300	26					146 - 150	26
Consult Factory						Consult Factory	

Cylinder Mounting and Rod Guiding Groups

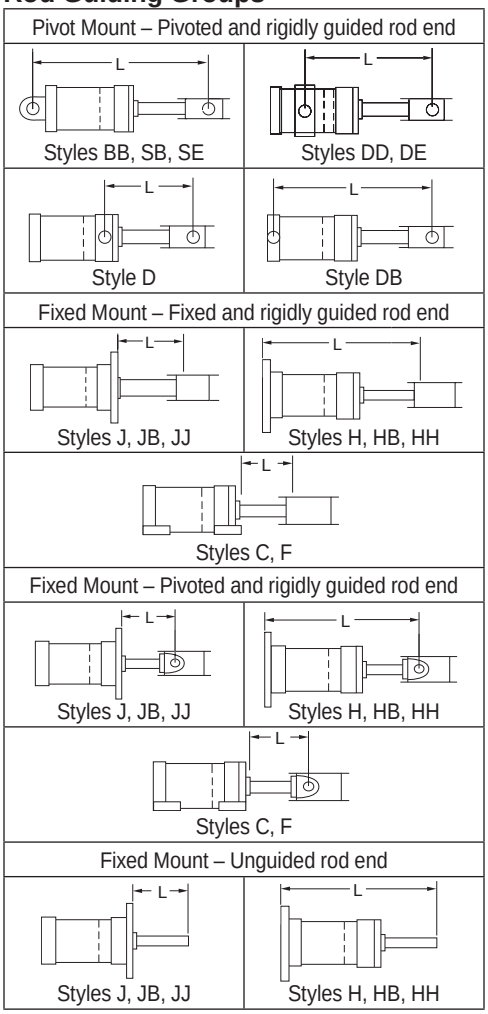

⚠PROP 65 WARNING **WARNING:** This product can expose you to chemicals including **Lead and Lead Compounds** which are known to the State of California to cause cancer and birth defects or other reproductive harm. For more information go to www.P65Warnings.ca.gov

Piston Rod Diameter Selection

Long stroke cylinders that work on push with the piston rod loaded in compression should be checked, using the following steps, to ensure an appropriate piston rod diameter is specified.

1. First, determine whether stop tubing is required as described on the previous page.
2. Use the Basic Length (L) that was established for determining the stop tube length and then add the required stop tube length to the Basic Length to obtain an Adjusted Basic Length (L_A).
3. In the table below, for the mounting style and rod end guiding condition that will be used, find the row for the Bore and Rod combination that is required.
4. Follow the Bore and Rod row to the right and find the Operating Pressure column that is closest, but exceeds the system pressure. The intersection of the Bore and Rod row and Operating Pressure column displays the maximum allowable L_A. If L_A in the table is greater than or equal to the calculated L_A, the rod diameter selected is satisfactory for the application.
5. If L_A in the table is less than the calculated Adjusted Basic Length move down the column to a rod diameter with an L_A that exceeds the requirement.
6. If the L_A specifies a rod diameter in a larger bore then restart the process of sizing the stop tube and re-check the rod diameter. Contact the factory if L_A exceeds 300 inches.

Note: Data in these tables assume standard rod extension (W or WF dimension) and standard rod end accessories. If different, consult factory.

Maximum Basic Lengths (L_A) (all dimensions in inches)

Bore Ø	Rod Ø	Front and Side Fixed Mounts (J[1], JB[1], JJ, TB, TD, C, F)																	
		Fixed and Rigidly Guided Rod End Max. Allowable Basic Length (L_A) at psi:						Pivoted and Rigidly Guided Rod End Max. Allowable Basic Length (L_A) at psi:						Unguided Rod End Max. Allowable Basic Length (L_A) at psi:					
		500	1000	1500	2000	2500	3000	500	1000	1500	2000	2500	3000	500	1000	1500	2000	2500	3000
1.50	0.625	50	35	29	25	22	20	36	25	21	18	16	15	13	9	7	6	6	5
	1.000	128	91	74	64	57	52	92	65	53	46	41	37	32	23	19	16	14	13
2.00	1.000	96	68	56	48	43	39	69	49	40	34	31	28	24	17	14	12	11	10
	1.375	182	129	105	91	81	74	130	92	75	65	58	53	45	32	26	23	20	19
2.50	1.000	77	54	44	38	34	31	55	39	32	27	25	22	19	14	11	10	9	8
	1.375	146	103	84	73	65	59	104	73	60	52	46	42	36	26	21	18	16	15
	1.750	236	167	136	118	105	96	168	119	97	84	75	69	59	42	34	29	26	24
3.25	1.375	112	79	65	56	50	46	80	57	46	40	36	33	28	20	16	14	13	11
	1.750	181	128	105	91	81	74	130	92	75	65	58	53	45	32	26	23	20	19
	2.000	237	167	137	118	106	97	169	120	98	85	76	69	59	42	34	30	26	24
4.00	1.750	147	104	85	74	66	60	105	74	61	53	47	43	37	26	21	18	16	15
	2.000	192	136	111	96	86	79	137	97	79	69	61	56	48	34	28	24	22	20
	2.500	300	213	174	150	134	123	215	152	124	107	96	88	75	53	43	38	34	31
5.00	2.000	154	109	89	77	69	63	110	78	63	55	49	45	38	27	22	19	17	16
	2.500	241	170	139	120	108	98	172	121	99	86	77	70	60	43	35	30	27	25
	3.000	300	245	200	173	155	141	247	175	143	124	111	101	87	61	50	43	39	35
	3.500	300	300	272	236	211	192	300	238	194	168	151	137	118	83	68	59	53	48
6.00	2.500	200	142	116	100	90	82	143	101	83	72	64	58	50	35	29	25	22	20
	3.000	289	204	167	144	129	118	206	146	119	103	92	84	72	51	42	36	32	29
	3.500	300	278	227	196	176	160	281	198	162	140	125	115	98	69	57	49	44	40
	4.000	300	300	296	257	229	209	300	259	212	183	164	150	128	91	74	64	57	52
7.00	3.000	247	175	143	124	111	101	177	125	102	88	79	72	62	44	36	31	28	25
	3.500	300	238	194	168	151	137	241	170	139	120	108	98	84	60	49	42	38	34
	4.000	300	300	254	220	197	180	300	222	181	157	140	128	110	78	63	55	49	45
	4.500	300	300	300	278	249	227	300	281	230	199	178	162	139	98	80	70	62	57
	5.000	300	300	300	300	300	281	300	300	283	245	220	200	172	121	99	86	77	70
8.00	3.500	295	208	170	147	132	120	210	149	122	105	94	86	74	52	43	37	33	30
	4.000	300	272	222	192	172	157	275	194	159	137	123	112	96	68	56	48	43	39
	4.500	300	300	281	244	218	199	300	246	201	174	156	142	122	86	70	61	54	50
	5.000	300	300	300	300	269	245	300	300	248	215	192	175	150	106	87	75	67	61
	5.500	300	300	300	300	300	297	300	300	300	260	232	212	182	129	105	91	81	74
10.00	4.500	300	276	225	195	174	159	278	197	161	139	124	114	97	69	56	49	44	40
	5.000	300	300	278	241	215	196	300	243	198	172	154	140	120	85	69	60	54	49
	5.500	300	300	300	291	260	238	300	294	240	208	186	170	146	103	84	73	65	59
	7.000	300	300	300	300	300	300	300	300	300	300	300	275	236	167	136	118	105	96
12.00	5.500	300	300	280	243	217	198	300	245	200	173	155	141	121	86	70	61	54	50
	7.000	300	300	300	300	300	300	300	300	300	281	251	229	196	139	113	98	88	80
	8.000	300	300	300	300	300	300	300	300	300	300	300	299	257	181	148	128	115	105
14.00	7.000	300	300	300	300	300	275	300	300	278	241	215	196	168	119	97	84	75	69
	8.000	300	300	300	300	300	300	300	300	300	300	281	256	220	155	127	110	98	90
	10.000	300	300	300	300	300	300	300	300	300	300	300	300	300	243	198	172	154	140
16.00	8.000	300	300	300	300	300	300	300	300	300	275	246	224	192	136	111	96	86	79
	9.000	300	300	300	300	300	300	300	300	300	300	300	284	244	172	141	122	109	99
	10.000	300	300	300	300	300	300	300	300	300	300	300	300	300	213	174	150	134	123
18.00	9.000	300	300	300	300	300	300	300	300	300	300	277	252	216	153	125	108	97	88
	10.000	300	300	300	300	300	300	300	300	300	300	300	300	267	189	154	134	120	109
20.00	10.000	300	300	300	300	300	300	300	300	300	300	300	281	241	170	139	120	108	98

[1] Maximum operating pressure is limited for Mounting Styles J and JB. Please refer to maximum operating pressure per bore in Pressure Ratings table located on the dimension page for each of these mounting styles.

⚠PROP 65 WARNING **WARNING:** This product can expose you to chemicals including **Lead and Lead Compounds** which are known to the State of California to cause cancer and birth defects or other reproductive harm. For more information go to www.P65Warnings.ca.gov

Maximum Basic Lengths (L_A) (all dimensions in inches)

Bore Ø	Rod Ø	Rear Fixed Mounts (H[1], HB, HH, TC)																	
		Fixed and Rigidly Guided Rod End Max. Allowable Basic Length (L_A) at psi:						Pivoted and Rigidly Guided Rod End Max. Allowable Basic Length (L_A) at psi:						Unguided Rod End Max. Allowable Basic Length (L_A) at psi:					
		500	1000	1500	2000	2500	3000	500	1000	1500	2000	2500	3000	500	1000	1500	2000	2500	3000
1.50	0.625	70	50	40	35	31	29	50	35	29	25	22	20	18	12	10	9	8	7
	1.000	170	120	98	85	76	69	121	86	70	61	54	50	42	30	25	21	19	17
2.00	1.000	132	93	76	66	59	54	94	67	54	47	42	38	33	23	19	16	15	13
	1.375	232	164	134	116	104	95	166	117	96	83	74	68	58	41	33	29	26	24
2.50	1.000	107	76	62	54	48	44	77	54	44	38	34	31	27	19	16	13	12	11
	1.375	197	140	114	99	88	81	141	100	81	70	63	58	49	35	28	25	22	20
	1.750	300	213	174	151	135	123	215	152	124	108	96	88	75	53	43	38	34	31
3.25	1.375	156	110	90	78	70	64	111	79	64	56	50	45	39	28	22	19	17	16
	1.750	246	174	142	123	110	100	176	124	102	88	79	72	62	44	36	31	28	25
	2.000	300	221	181	157	140	128	224	158	129	112	100	91	78	55	45	39	35	32
4.00	1.750	203	144	117	102	91	83	145	103	84	73	65	59	51	36	29	25	23	21
	2.000	261	185	151	131	117	107	187	132	108	93	83	76	65	46	38	33	29	27
	2.500	300	274	224	194	173	158	277	196	160	138	124	113	97	69	56	48	43	40
5.00	2.000	214	151	123	107	96	87	153	108	88	76	68	62	53	38	31	27	24	22
	2.500	300	231	188	163	146	133	233	165	135	117	104	95	82	58	47	41	36	33
	3.000	300	300	261	226	202	184	300	228	186	161	144	132	113	80	65	56	50	46
	3.500	300	300	300	289	259	236	300	292	239	207	185	169	145	102	83	72	65	59
6.00	2.500	278	197	161	139	124	114	199	141	115	99	89	81	70	49	40	35	31	28
	3.000	300	278	227	197	176	161	281	199	162	140	126	115	98	70	57	49	44	40
	3.500	300	300	300	260	233	212	300	263	215	186	166	152	130	92	75	65	58	53
	4.000	300	300	300	300	292	266	300	300	269	233	208	190	163	115	94	82	73	67
7.00	3.000	300	241	197	171	153	139	244	172	141	122	109	100	85	60	49	43	38	35
	3.500	300	300	263	228	204	186	300	230	188	163	146	133	114	81	66	57	51	46
	4.000	300	300	300	289	259	236	300	292	239	207	185	169	145	102	83	72	65	59
	4.500	300	300	300	300	300	288	300	300	290	252	225	205	176	124	102	88	79	72
	5.000	300	300	300	300	300	300	300	300	300	296	264	241	207	146	119	103	93	84
8.00	3.500	300	288	235	203	182	166	291	205	168	145	130	119	102	72	59	51	45	42
	4.000	300	300	300	261	234	213	300	264	216	187	167	152	131	92	75	65	58	53
	4.500	300	300	300	300	290	264	300	300	267	231	207	189	162	114	93	81	72	66
	5.000	300	300	300	300	300	300	300	300	300	277	248	226	194	137	112	97	87	79
	5.500	300	300	300	300	300	300	300	300	300	300	289	264	226	160	131	113	101	92
10.00	4.500	300	300	300	269	241	220	300	272	222	192	172	157	135	95	78	67	60	55
	5.000	300	300	300	300	294	268	300	300	271	235	210	192	164	116	95	82	73	67
	5.500	300	300	300	300	300	300	300	300	300	280	250	229	196	139	113	98	88	80
	7.000	300	300	300	300	300	300	300	300	300	300	300	300	296	209	171	148	132	121
12.00	5.500	300	300	300	300	299	273	300	300	276	239	213	195	167	118	96	84	75	68
	7.000	300	300	300	300	300	300	300	300	300	300	300	300	260	184	150	130	116	106
	8.000	300	300	300	300	300	300	300	300	300	300	300	300	300	231	189	163	146	133
14.00	7.000	300	300	300	300	300	300	300	300	300	300	291	266	228	161	132	114	102	93
	8.000	300	300	300	300	300	300	300	300	300	300	300	300	290	205	167	145	129	118
	10.000	300	300	300	300	300	300	300	300	300	300	300	300	300	293	240	207	186	169
16.00	8.000	300	300	300	300	300	300	300	300	300	300	300	300	260	184	150	130	116	106
	9.000	300	300	300	300	300	300	300	300	300	300	300	300	300	227	186	161	144	131
	10.000	300	300	300	300	300	300	300	300	300	300	300	300	300	272	222	192	172	157
18.00	9.000	300	300	300	300	300	300	300	300	300	300	300	300	293	207	169	146	131	119
	10.000	300	300	300	300	300	300	300	300	300	300	300	300	300	250	204	177	158	144
20.00	10.000	300	300	300	300	300	300	300	300	300	300	300	300	300	231	188	163	146	133

[1] Maximum operating pressure is limited for Mounting Style H. Please refer to maximum operating pressure per bore in Pressure Ratings table located on the dimension page for Mounting Style H.

⚠**PROP 65 WARNING** **WARNING:** This product can expose you to chemicals including **Lead and Lead Compounds** which are known to the State of California to cause cancer and birth defects or other reproductive harm. For more information go to www.P65Warnings.ca.gov

Maximum Basic Lengths (L_A) (all dimensions in inches)

Bore Ø	Rod Ø	Rear Pivot Mounts (BB, SB[1], SE, DB)						Front and Intermediate Pivot Mounts (D, DD, DE)					
		Pivoted & Rigidly Guided Rod End Max. Allowable Basic Length (L_A) at psi:						Pivoted & Rigidly Guided Rod End Max. Allowable Basic Length (L_A) at psi:					
		500	1000	1500	2000	2500	3000	500	1000	1500	2000	2500	3000
1.50	0.625	35	25	20	18	16	14	25	18	14	13	11	10
	1.000	85	60	49	42	38	35	64	45	37	32	29	26
2.00	1.000	66	47	38	33	29	27	48	34	28	24	22	20
	1.375	116	82	67	58	52	47	91	64	53	45	41	37
2.50	1.000	54	38	31	27	24	22	38	27	22	19	17	16
	1.375	99	70	57	49	44	40	73	51	42	36	33	30
	1.750	151	106	87	75	67	61	118	83	68	59	53	48
3.25	1.375	78	55	45	39	35	32	56	40	32	28	25	23
	1.750	123	87	71	62	55	50	91	64	52	45	41	37
	2.000	157	111	90	78	70	64	118	84	68	59	53	48
4.00	1.750	102	72	59	51	45	41	74	52	43	37	33	30
	2.000	131	92	75	65	58	53	96	68	56	48	43	39
	2.500	194	137	112	97	87	79	150	106	87	75	67	61
5.00	2.000	107	76	62	53	48	44	77	54	44	38	34	31
	2.500	163	115	94	82	73	67	120	85	69	60	54	49
	3.000	226	160	130	113	101	92	173	122	100	87	77	71
	3.500	289	204	167	145	129	118	236	167	136	118	105	96
6.00	2.500	139	98	80	70	62	57	100	71	58	50	45	41
	3.000	197	139	114	98	88	80	144	102	83	72	65	59
	3.500	260	184	150	130	116	106	196	139	113	98	88	80
	4.000	300	231	188	163	146	133	257	181	148	128	115	105
7.00	3.000	171	121	99	85	76	70	124	87	71	62	55	50
	3.500	228	161	132	114	102	93	168	119	97	84	75	69
	4.000	289	204	167	145	129	118	220	155	127	110	98	90
	4.500	300	249	203	176	157	144	278	197	161	139	124	114
	5.000	300	293	239	207	185	169	300	243	198	172	154	140
8.00	3.500	203	144	117	102	91	83	147	104	85	74	66	60
	4.000	261	185	151	131	117	107	192	136	111	96	86	79
	4.500	300	229	187	162	145	132	244	172	141	122	109	99
	5.000	300	274	224	194	174	158	300	213	174	150	134	123
	5.500	300	300	261	226	202	185	300	257	210	182	163	149
10.00	4.500	269	190	155	135	120	110	195	138	112	97	87	80
	5.000	300	232	190	164	147	134	291	206	168	146	130	119
	5.500	300	277	226	196	175	160	300	300	272	236	211	192
	7.000	300	300	300	296	265	242	241	170	139	120	108	98
12.00	5.500	300	236	193	167	149	136	243	171	140	121	108	99
	7.000	300	300	300	260	233	213	300	300	296	257	229	209
	8.000	300	300	300	300	292	267	300	278	227	196	176	160
14.00	7.000	300	300	263	228	204	186	300	238	194	168	151	137
	8.000	300	300	300	290	259	236	300	300	300	300	300	281
	10.000	300	300	300	300	300	300	300	300	254	220	197	180
16.00	8.000	300	300	300	260	233	213	300	272	222	192	172	157
	9.000	300	300	300	300	288	263	300	300	281	244	218	199
	10.000	300	300	300	300	300	300	300	300	300	300	269	245
18.00	9.000	300	300	300	293	262	239	300	300	250	216	194	177
	10.000	300	300	300	300	300	289	300	300	300	267	239	218
20.00	10.000	300	300	300	300	292	267	300	300	278	241	215	196

[1] Maximum operating pressure is limited for Mounting Style SB. Please refer to maximum operating pressure per bore in Pressure Ratings table located on the dimension page for Mounting Styles SB.

⚠ **PROP 65 WARNING** **WARNING:** This product can expose you to chemicals including **Lead and Lead Compounds** which are known to the State of California to cause cancer and birth defects or other reproductive harm. For more information go to www.P65Warnings.ca.gov

An Introduction to Cushioning

Cushioning is recommended as a means of controlling the deceleration of masses, or for applications where piston speed is in excess of 4 in/sec and the piston will make full stroke. Cushioning extends cylinder life and reduces undesirable noise and hydraulic shock. Built-in “cushions” are optional and can be supplied at the head and cap ends of a cylinder without affecting its envelope or mounting dimensions.

Standard Cushioning

Ideal cushion performance shows an almost uniform absorption of energy along the cushioning length, as shown. Many forms of cushioning exist, and each has its own specific merits and advantages.

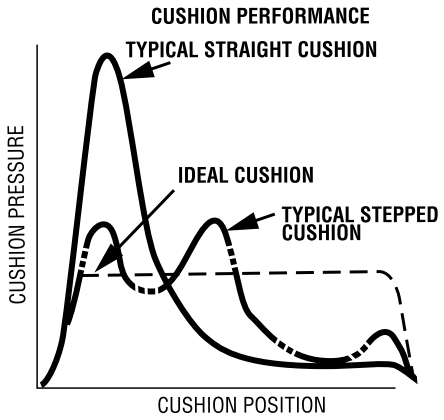

In order to cover the majority of applications, 2H/3H cylinders are supplied with profiled cushioning as standard. Final speed may be adjusted using the cushion screw. The performance of profiled cushioning is indicated on the diagram, and cushion performance for each of the rod sizes available is illustrated graphically in the charts on the following pages.

Note: Cushion performance will be affected by the use of water or high water based fluids. Please consult factory for details.

Cushion Length

Where specified, 2H/2HD/2HB and 3H/3HD/3HB cylinders incorporate the longest cushion sleeve and spear that can be accommodated within the standard envelope without reducing the rod bearing and piston bearing length. See cushion lengths on the next page. Cushions are adjustable via recessed needle valves.

Cushion Calculation

The charts on the cushion energy absorption capacity data page show the energy absorption capacity for each bore/rod combination at the head (annulus) and the cap (full bore) ends of cylinder. The charts are valid for piston velocities within a range of 0.33 to 1 ft/s. For velocities between 1ft/s and 1.64 ft/s the energy values derived from the charts should be reduced by 25%. For velocities less than 0.33 ft/s where large masses are involved, and for velocities greater than 1.60 ft/s, a special cushion profile may be required. Please consult the factory for details.

The cushion capacity of the head end is less than the cap, and reduces to zero at high drive pressures due to the pressure intensification effect across the piston.

The energy absorption capacity of the cushion decreases with drive pressure.

Formula

Cushioning calculations are based on the formula $E=(1/2)mv^2$ for horizontal applications. For inclined or vertically downward or upward applications, this is modified to:

$E = (1/2)mv^2 + mg(L/12) \times \sin(a)$
(for inclined or vertically downward direction of mass)

$E = (1/2)mv^2 – mg(L/12) \times \sin(a)$
(for inclined vertically upward direction of mass)

where:

E = energy absorbed in ft-lb
g = acceleration due to gravity = 32.2 ft/s^2
v = velocity in ft/s
L = length of cushion in inches (see cushion length chart on the next page).
m = mass of load in slug (including piston, rod and rod end accessories.
a = angle to the horizontal in degrees
p = pressure in psi

Example:

The following example shows how to calculate the energy developed by masses moving in a straight line. For non-linear motion, other calculations are required; please consult the factory. The example assumes that the bore and rod diameter are already appropriate for the application. The effects of friction on the cylinder and load have been ignored.

Selected bore/rod 6.00" bore x 2.50" rod (No. 1 rod)

Cushion at the cap end.
Pressure = 2,500 psi
Mass = 685 slugs = weight in lb / (32.2 ft/s^2)
Velocity = 1.3 ft/s
Cushion length = 1.313 inch
a = 45°
Sin (a) = 0.70
$E = (1/2)mv^2 + mgl/12 \times \text{Sin (a)}$
$= (1/2) \times 685 \times 1.3^2 + 685 \times 32.2 \times 1.313/12 \times 0.70$
= 2,268 ft-lb

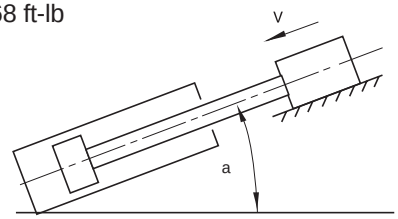

Note: In the above example velocity is greater than 1 ft/s Therefore, a de-rating factor of 0.75 must be applied to the calculated value of E. Applying this correction factor will increase the energy value to 3024 ft-lb (2268/0.75 = 3024 ft-lb). A review of the graph for the cap end cushion of a 6 inch bore x 2.50" rod cylinder operating at 2500 psi indicates that it can absorb approximately 3200 ft-lb maximum of energy. Since 3024 ft-lb is less than the maximum allowable of 3200 ft-lb, the cylinder can be applied as indicated. If the calculated energy exceeds the value shown on the curve, select a larger bore cylinder and/or reduce the operating pressure and recalculate the energy. Compare the newly calculated energy value to the appropriate curve to ensure it does not exceed the maximum allowable energy.

⚠**PROP 65 WARNING** **WARNING:** This product can expose you to chemicals including **Lead and Lead Compounds** which are known to the State of California to cause cancer and birth defects or other reproductive harm. For more information go to www.P65Warnings.ca.gov

Cushion Length Chart (Series 2H/2HD/2HB & 3H/3HD/3HB Cylinders)

Bore Ø	Rod Ø	Effective Cushion Length	
		Head	Cap
1.50	0.625	0.924	1.000
	1.000	0.927	1.000
2.00	1.000	0.927	0.938
	1.375	0.925	0.938
2.50	1.000	0.927	0.938
	1.750	0.928	0.938
	1.375	0.925	0.938
3.25	1.375	1.175	1.125
	2.000	0.862	1.125
	1.750	1.178	1.125
4.00	1.750	1.178	1.063
	2.500	0.869	1.063
	2.000	0.862	1.063
5.00	2.000	0.862	0.938
	3.500	0.869	0.938
	2.500	0.869	0.938
	3.000	0.869	0.938
6.00	2.500	1.119	1.313
	4.000	1.119	1.313
	3.000	1.119	1.313
	3.500	0.869	1.313
7.00	3.000	1.619	1.750
	5.000	1.496	1.750
	3.500	1.619	1.750
	4.000	1.119	1.750
	4.500	1.496	1.750
8.00	3.500	1.869	1.813
	5.500	1.745	1.813
	4.000	1.119	1.813
	4.500	1.496	1.813
	5.000	1.496	1.813

⚠**PROP 65 WARNING** **WARNING:** This product can expose you to chemicals including **Lead and Lead Compounds** which are known to the State of California to cause cancer and birth defects or other reproductive harm. For more information go to www.P65Warnings.ca.gov

Cushion Energy Absorption Capacity Data

The cushion energy absorption data shown below is based on the maximum fatigue-free pressure developed in the tube. For application with a life cycle of less than 10^6 cycles, greater energy absorption figures can be applied. Please consult the factory if further information is required.

Head End

STANDARD ROD DIA.

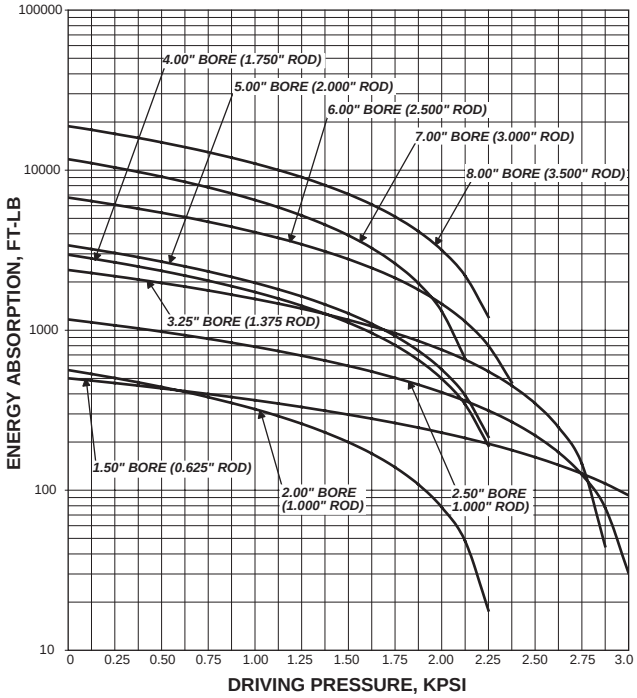

MAXIMUM ROD DIA.

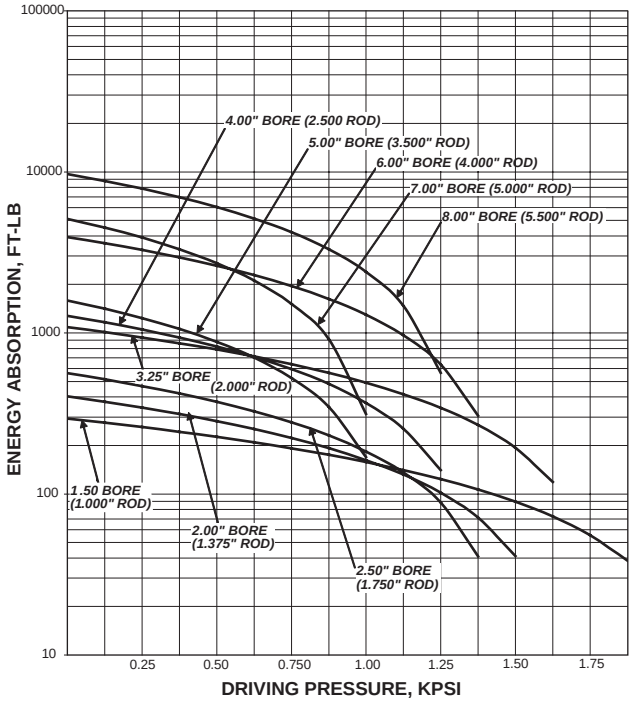

FIRST OVERSIZE ROD DIA.

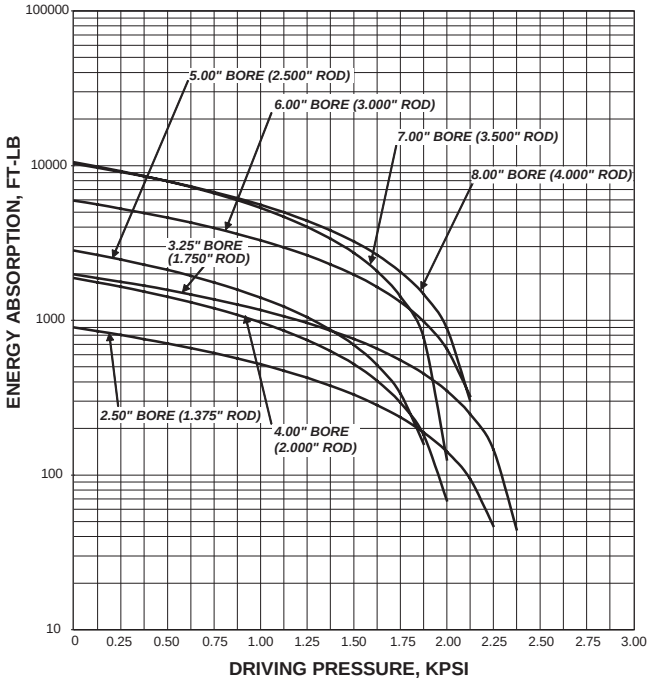

SECOND OVERSIZE ROD DIA.

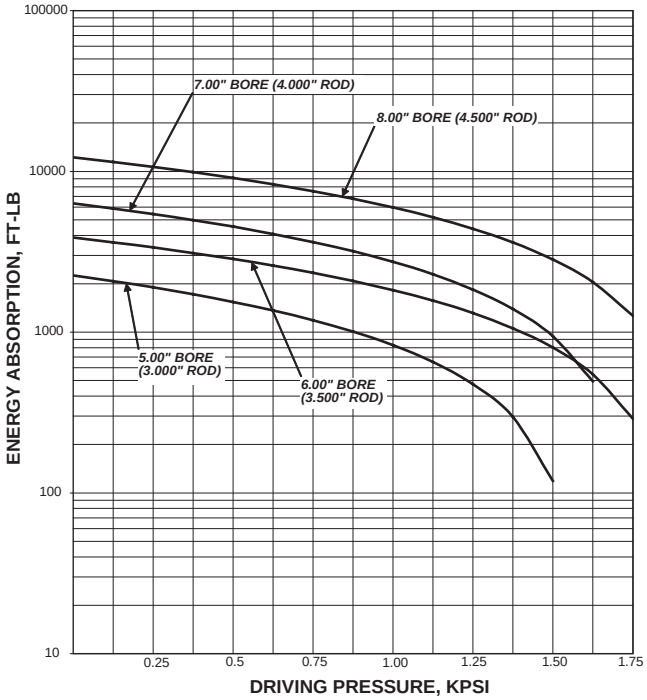

⚠PROP 65 WARNING **WARNING:** This product can expose you to chemicals including **Lead and Lead Compounds** which are known to the State of California to cause cancer and birth defects or other reproductive harm. For more information go to www.P65Warnings.ca.gov

Cushion Energy Absorption Capacity Data

The cushion energy absorption data shown below is based on the maximum fatigue-free pressure developed in the tube. For application with a life cycle of less than 10^6 cycles, greater energy absorption figures can be applied. Please consult the factory if further information is required.

Head End

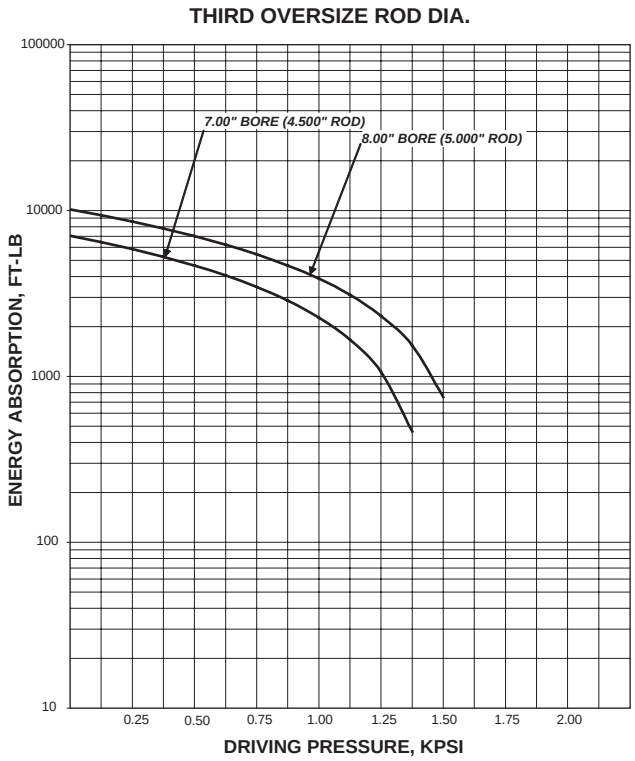

⚠ **PROP 65 WARNING** **WARNING:** This product can expose you to chemicals including **Lead and Lead Compounds** which are known to the State of California to cause cancer and birth defects or other reproductive harm. For more information go to www.P65Warnings.ca.gov

Cushion Energy Absorption Capacity Data

The cushion energy absorption data shown below is based on the maximum fatigue-free pressure developed in the tube. For application with a life cycle of less than 10^6 cycles, greater energy absorption figures can be applied. Please consult the factory if further information is required.

Note: Cap end cushioned cylinders with oversize port and hydraulic fluid flow entering the cap that exceeds 25 ft/second should be specified with solid cap cushion design.

Cap End

ROD NO. 1

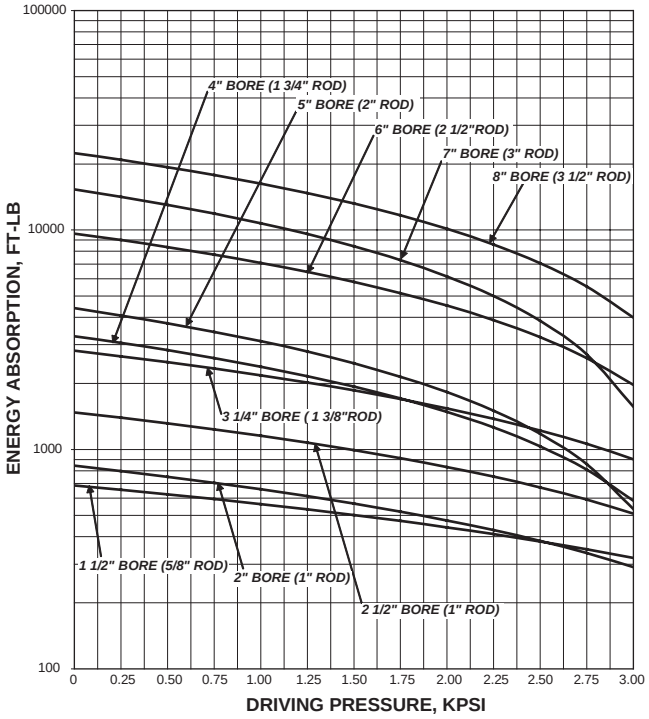

ROD NO. 2

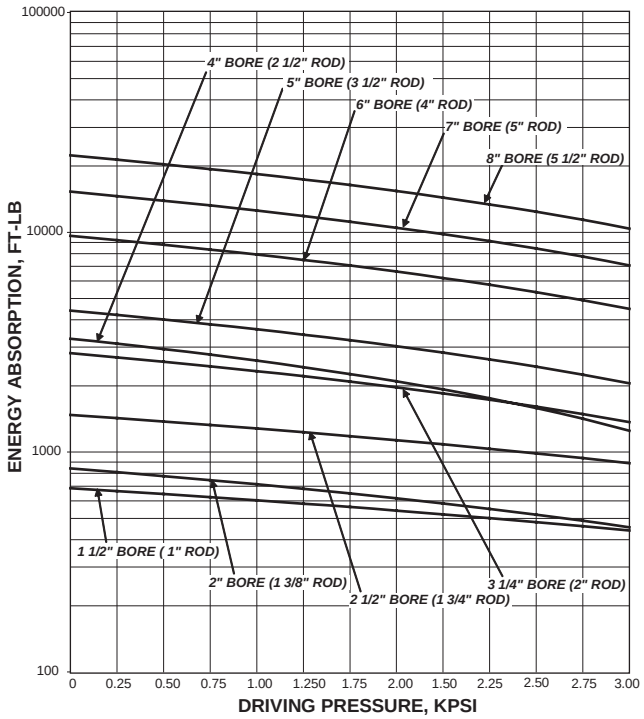

ROD NO. 3

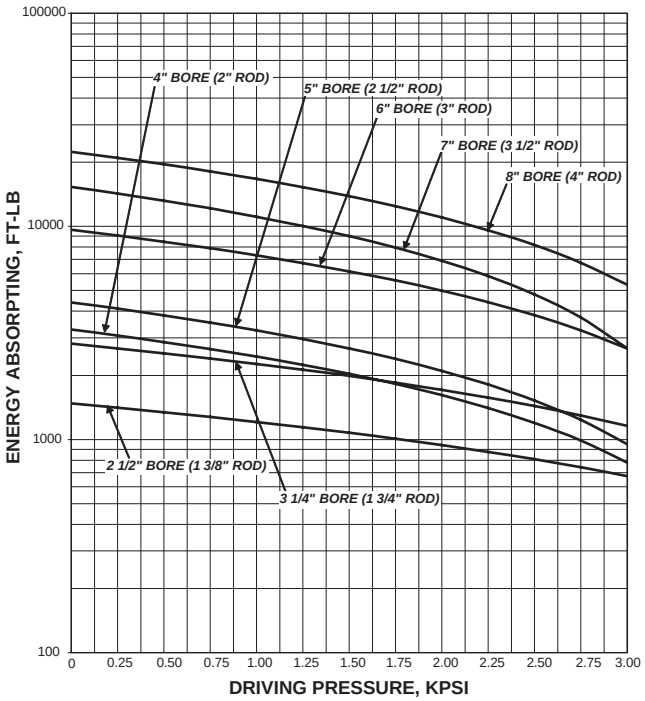

ROD NO. 4

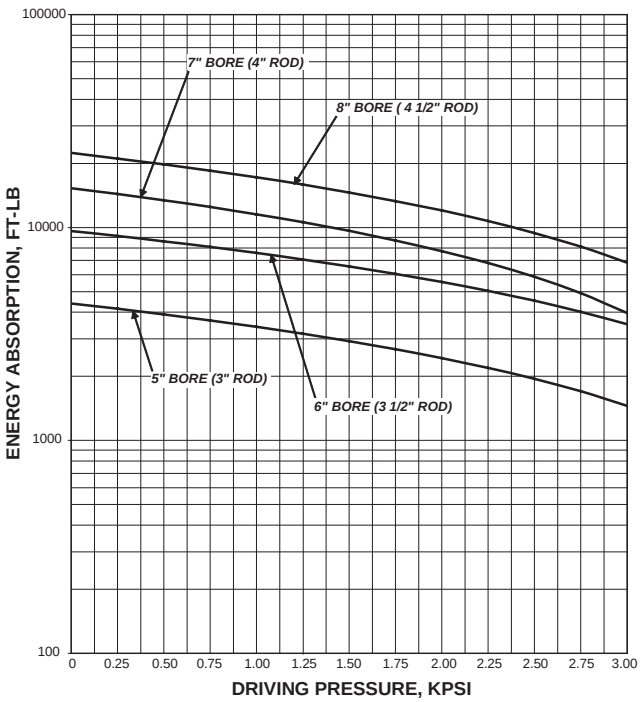

⚠PROP 65 WARNING **WARNING:** This product can expose you to chemicals including **Lead and Lead Compounds** which are known to the State of California to cause cancer and birth defects or other reproductive harm. For more information go to www.P65Warnings.ca.gov

Cushion Energy Absorption Capacity Data

The cushion energy absorption data shown below is based on the maximum fatigue-free pressure developed in the tube. For application with a life cycle of less than 10^6 cycles, greater energy absorption figures can be applied. Please consult the factory if further information is required.

Note: Cap end cushioned cylinders with oversize port and hydraulic fluid flow entering the cap that exceeds 25 ft/second should be specified with solid cap cushion design.

Cap End

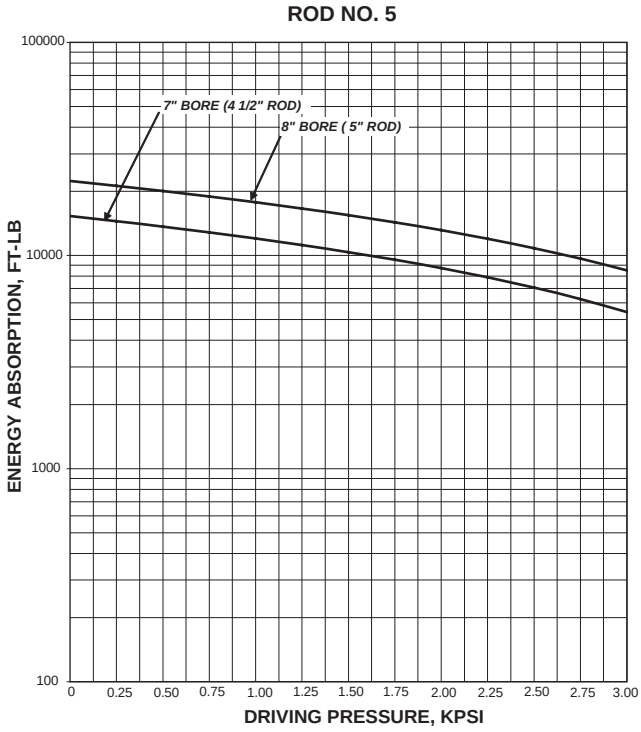

⚠ **PROP 65 WARNING** **WARNING:** This product can expose you to chemicals including **Lead and Lead Compounds** which are known to the State of California to cause cancer and birth defects or other reproductive harm. For more information go to www.P65Warnings.ca.gov

Notes

⚠**PROP 65 WARNING** **WARNING:** This product can expose you to chemicals including **Lead and Lead Compounds** which are known to the State of California to cause cancer and birth defects or other reproductive harm. For more information go to www.P65Warnings.ca.gov

Safety Guide for Selecting and Using Hydraulic, Pneumatic Cylinders and Their Accessories

WARNING: ⚠ FAILURE OF THE CYLINDER, ITS PARTS, ITS MOUNTING, ITS CONNECTIONS TO OTHER OBJECTS, OR ITS CONTROLS CAN RESULT IN:

- **Unanticipated or uncontrolled movement of the cylinder or objects connected to it.**
- **Falling of the cylinder or objects held up by it.**
- **Fluid escaping from the cylinder, potentially at high velocity.**

THESE EVENTS COULD CAUSE DEATH OR PERSONAL INJURY BY, FOR EXAMPLE, PERSONS FALLING FROM HIGH LOCATIONS, BEING CRUSHED OR STRUCK BY HEAVY OR FAST MOVING OBJECTS, BEING PUSHED INTO DANGEROUS EQUIPMENT OR SITUATIONS, OR SLIPPING ON ESCAPED FLUID.

Before selecting or using Parker Hannifin Corporation (the Company) cylinders or related accessories, it is important that you read, understand and follow the following safety information. Training is advised before selecting and using the Company's products.

1.0 General Instructions

1.1 Scope – This safety guide provides instructions for selecting and using (including assembling, installing, and maintaining) cylinder products. This safety guide is a supplement to and is to be used with the specific Company publications for the specific cylinder products that are being considered for use.

1.2 Fail Safe – Cylinder products can and do fail without warning for many reasons. All systems and equipment should be designed in a fail-safe mode so that if the failure of a cylinder product occurs people and property won't be endangered.

1.3 Distribution – Provide a free copy of this safety guide to each person responsible for selecting or using cylinder products. Do not select or use the Company's cylinders without thoroughly reading and understanding this safety guide as well as the specific Company publications for the products considered or selected.

1.4 User Responsibility – Due to very wide variety of cylinder applications and cylinder operating conditions, the Company does not warrant that any particular cylinder is suitable for any specific application. This safety guide does not analyze all technical parameters that must be considered in selecting a product. The hydraulic and pneumatic cylinders outlined in this catalog are designed to the Company's design guidelines and do not necessarily meet the design guideline of other agencies such as American Bureau of Shipping, ASME Pressure Vessel Code etc. The user, through its own analysis and testing, is solely responsible for:

- Making the final selection of the cylinders and related accessories.
- Determining if the cylinders are required to meet specific design requirements as required by the Agency(s) or industry standards covering the design of the user's equipment.
- Assuring that the user's requirements are met, OSHA requirements are met, and safety guidelines from the applicable agencies such as but not limited to ANSI are followed and that the use presents no health or safety hazards.
- Providing all appropriate health and safety warnings on the equipment on which the cylinders are used.

1.5 Additional Questions – Call the appropriate Company technical service department if you have any questions or require any additional information. See the Company publication for the product being considered or used, or call 1-847-298-2400, or go to www.parker.com, for telephone numbers of the appropriate technical service department.

2.0 Cylinder and Accessories Selection

2.1 Seals – Part of the process of selecting a cylinder is the selection of seal compounds. Before making this selection, consult the "seal information page(s)" of the publication for the series of cylinders of interest.

The application of cylinders may allow fluids such as cutting fluids, wash down fluids etc. to come in contact with the external area of the cylinder. These fluids may attack the piston rod wiper and or the primary seal and must be taken into account when selecting and specifying seal compounds.

Dynamic seals will wear. The rate of wear will depend on many operating factors. Wear can be rapid if a cylinder is mis-aligned or if the cylinder has been improperly serviced. The user must take seal wear into consideration in the application of cylinders.

2.2 Piston Rods – Possible consequences of piston rod failure or separation of the piston rod from the piston include, but are not limited to are:

- Piston rod and or attached load thrown off at high speed.
- High velocity fluid discharge.
- Piston rod extending when pressure is applied in the piston retract mode.

Piston rods or machine members attached to the piston rod may move suddenly and without warning as a consequence of other conditions occurring to the machine such as, but not limited to:

- Unexpected detachment of the machine member from the piston rod.
- Failure of the pressurized fluid delivery system (hoses, fittings, valves, pumps, compressors) which maintain cylinder position.
- Catastrophic cylinder seal failure leading to sudden loss of pressurized fluid.
- Failure of the machine control system.

Follow the recommendations of the "Piston Rod Selection Chart and Data" in the publication for the series of cylinders of interest. The suggested piston rod diameter in these charts must be followed in order to avoid piston rod buckling.

Piston rods are not normally designed to absorb bending moments or loads which are perpendicular to the axis of piston rod motion. These additional loads can cause the piston rod to fail. If these types of additional loads are expected to be imposed on the piston rod, their magnitude should be made known to our engineering department.

The cylinder user should always make sure that the piston rod is securely attached to the machine member.

On occasion cylinders are ordered with double rods (a piston rod extended from both ends of the cylinder). In some cases a stop is threaded on to one of the piston rods and used as an external stroke adjuster. On occasions spacers are attached to the machine member connected to the piston rod and also used as a stroke adjuster. In both cases the stops will create a pinch point and the user should consider appropriate use of guards. If these external stops are not perpendicular to the mating contact surface, or if debris is trapped between the contact surfaces, a bending moment will be placed on the piston rod, which can lead to piston rod failure. An external stop will also negate the effect of cushioning and will subject the piston rod to impact loading. Those two (2) conditions can cause piston rod failure. Internal stroke adjusters are available with and without cushions. The use of external stroke adjusters should be reviewed with our engineering department.

The piston rod to piston and the stud to piston rod threaded connections are secured with an anaerobic adhesive. The strength of the adhesive decreases with increasing temperature. Cylinders which can be exposed to temperatures above +250°F (+121°C) are to be ordered with a non studded piston rod and a pinned piston to rod joint.

2.3 Cushions – Cushions should be considered for cylinder applications when the piston velocity is expected to be over 4 inches/second.

Cylinder cushions are normally designed to absorb the energy of a linear applied load. A rotating mass has considerably more energy than the same mass moving in a linear mode. Cushioning for a rotating mass application should be reviewed by our engineering department.

2.4 Cylinder Mountings – Some cylinder mounting configurations may have certain limitations such as but not limited to minimum stroke for side or foot mounting cylinders or pressure de-ratings for certain mounts. Carefully review the catalog for these types of restrictions.

Always mount cylinders using the largest possible high tensile alloy steel socket head cap screws that can fit in the cylinder mounting holes and torque them to the manufacturer's recommendations for their size.

2.5 Port Fittings – Hydraulic cylinders applied with meter out or deceleration circuits are subject to intensified pressure at piston rod end.

The rod end pressure is approximately equal to:

$$\frac{\text{operating pressure x effective cap end area}}{\text{effective rod end piston area}}$$

Contact your connector supplier for the pressure rating of individual connectors.

3.0 Cylinder and Accessories Installation and Mounting

3.1 Installation

3.1.1 – Cleanliness is an important consideration, and cylinders are shipped with the ports plugged to protect them from contaminants entering the ports. These plugs should not be removed until the piping is to be installed. Before making the connection to the cylinder ports, piping should be thoroughly cleaned to remove all chips or burrs which might have resulted from threading or flaring operations.

⚠PROP 65 WARNING **WARNING:** This product can expose you to chemicals including **Lead and Lead Compounds** which are known to the State of California to cause cancer and birth defects or other reproductive harm. For more information go to www.P65Warnings.ca.gov

3.1.2 – Cylinders operating in an environment where air drying materials are present such as fast-drying chemicals, paint, or weld splatter, or other hazardous conditions such as excessive heat, should have shields installed to prevent damage to the piston rod and piston rod seals.

3.1.3 – Proper alignment of the cylinder piston rod and its mating component on the machine should be checked in both the extended and retracted positions. Improper alignment will result in excessive rod gland and/or cylinder bore wear. On fixed mounting cylinders attaching the piston rod while the rod is retracted will help in achieving proper alignment.

3.1.4 – Sometimes it may be necessary to rotate the piston rod in order to thread the piston rod into the machine member. This operation must always be done with zero pressure being applied to either side of the piston. Failure to follow this procedure may result in loosening the piston to rod-threaded connection. In some rare cases the turning of the piston rod may rotate a threaded piston rod gland and loosen it from the cylinder head. Confirm that this condition is not occurring. If it does, re-tighten the piston rod gland firmly against the cylinder head.

For double rod cylinders it is also important that when attaching or detaching the piston rod from the machine member that the torque be applied to the piston rod end of the cylinder that is directly attaching to the machine member with the opposite end unrestrained. If the design of the machine is such that only the rod end of the cylinder opposite to where the rod attaches to the machine member can be rotated, consult the factory for further instructions.

3.2 Mounting Recommendations

3.2.1 – Always mount cylinders using the largest possible high tensile alloy steel socket head screws that can fit in the cylinder mounting holes and torque them to the manufacturer's recommendations for their size.

3.2.2 – Side-Mounted Cylinders – In addition to the mounting bolts, cylinders of this type should be equipped with thrust keys or dowel pins located so as to resist the major load.

3.2.3 – Tie Rod Mounting – Cylinders with tie rod mountings are recommended for applications where mounting space is limited. The standard tie rod extension is shown as BB in dimension tables. Longer or shorter extensions can be supplied. Nuts used for this mounting style should be torqued to the same value as the tie rods for that bore size.

3.2.4 – Flange Mount Cylinders – The controlled diameter of the rod gland extension on head end flange mount cylinders can be used as a pilot to locate the cylinders in relation to the machine. After alignment has been obtained, the flanges may be drilled for pins or dowels to prevent shifting.

3.2.5 – Trunnion Mountings – Cylinders require lubricated bearing blocks with minimum bearing clearances. Bearing blocks should be carefully aligned and rigidly mounted so the trunnions will not be subjected to bending moments. The rod end should also be pivoted with the pivot pin in line and parallel to axis of the trunnion pins.

3.2.6 – Clevis Mountings – Cylinders should be pivoted at both ends with centerline of pins parallel to each other. After cylinder is mounted, be sure to check to assure that the cylinder is free to swing through its working arc without interference from other machine parts.

4.0 Cylinder and Accessories Maintenance, Troubleshooting and Replacement

4.1 Storage – At times cylinders are delivered before a customer is ready to install them and must be stored for a period of time. When storage is required the following procedures are recommended.

4.1.1 – Store the cylinders in an indoor area which has a dry, clean and noncorrosive atmosphere. Take care to protect the cylinder from both internal corrosion and external damage.

4.1.2 – Whenever possible cylinders should be stored in a vertical position (piston rod up). This will minimize corrosion due to possible condensation which could occur inside the cylinder. This will also minimize seal damage.

4.1.3 – Port protector plugs should be left in the cylinder until the time of installation.

4.1.4 – If a cylinder is stored full of hydraulic fluid, expansion of the fluid due to temperature changes must be considered. Installing a check valve with free flow out of the cylinder is one method.

4.1.5 – When cylinders are mounted on equipment that is stored outside for extended periods, exposed unpainted surfaces, e.g. piston rod, must be coated with a rust-inhibiting compound to prevent corrosion.

4.2 Cylinder Trouble Shooting

4.2.1 – **External Leakage**

4.2.1.1 – Rod seal leakage can generally be traced to worn or damaged seals. Examine the piston rod for dents, gouges or score marks, and replace piston rod if surface is rough.

Rod seal leakage could also be traced to gland wear. If clearance is excessive, replace rod bushing and seal. Rod seal leakage can also be traced to seal deterioration. If seals are soft or gummy or brittle, check compatibility of seal material with lubricant used if air cylinder, or operating fluid if hydraulic cylinder. Replace with seal material, which is compatible with these fluids. If the seals are hard or have lost elasticity, it is usually due to exposure to temperatures in excess of 165°F. (+74°C). Shield the cylinder from the heat source to limit temperature to 350°F. (+177°C.) and replace with fluorocarbon seals.

4.2.1.2 – Cylinder body seal leak can generally be traced to loose tie rods. Torque the tie rods to manufacturer's recommendation for that bore size.

Excessive pressure can also result in cylinder body seal leak. Determine maximum pressure to rated limits. Replace seals and retorque tie rods as in paragraph above. Excessive pressure can also result in cylinder body seal leak. Determine if the pressure rating of the cylinder has been exceeded. If so, bring the operating pressure down to the rating of the cylinder and have the tie rods replaced.

Pinched or extruded cylinder body seal will also result in a leak. Replace cylinder body seal and retorque as in paragraph above.

Cylinder body seal leakage due to loss of radial squeeze which shows up in the form of flat spots or due to wear on the O.D. or I.D. – Either of these are symptoms of normal wear due to high cycle rate or length of service. Replace seals as per paragraph above.

4.2.2 – **Internal Leakage**

4.2.2.1 – Piston seal leak (by-pass) 1 to 3 cubic inches per minute leakage is considered normal for piston ring construction. Virtually no static leak with lipseal type seals on piston should be expected. Piston seal wear is a usual cause of piston seal leakage. Replace seals as required.

4.2.2.2 – With lipseal type piston seals excessive back pressure due to over-adjustment of speed control valves could be a direct cause of rapid seal wear. Contamination in a hydraulic system can result in a scored cylinder bore, resulting in rapid seal wear. In either case, replace piston seals as required.

4.2.2.3 – What appears to be piston seal leak, evidenced by the fact that the cylinder drifts, is not always traceable to the piston. To make sure, it is suggested that one side of the cylinder piston be pressurized and the fluid line at the opposite port be disconnected. Observe leakage. If none is evident, seek the cause of cylinder drift in other component parts in the circuit.

4.2.3 – **Cylinder Fails to Move the Load**

4.2.3.1 – Pneumatic or hydraulic pressure is too low. Check the pressure at the cylinder to make sure it is to circuit requirements.

4.2.3.2 – Piston Seal Leak – Operate the valve to cycle the cylinder and observe fluid flow at valve exhaust ports at end of cylinder stroke. Replace piston seals if flow is excessive.

4.2.3.3 – Cylinder is undersized for the load – Replace cylinder with one of a larger bore size.

4.3 Erratic or Chatter Operation

4.3.1 – Excessive friction at rod gland or piston bearing due to load misalignment – Correct cylinder-to-load alignment.

4.3.2 – Cylinder sized too close to load requirements – Reduce load or install larger cylinder.

4.3.3 – Erratic operation could be traced to the difference between static and kinetic friction. Install speed control valves to provide a back pressure to control the stroke.

4.4 Cylinder Modifications, Repairs, or Failed Component – Cylinders as shipped from the factory are not to be disassembled and or modified. If cylinders require modifications, these modifications must be done at company locations or by the Company's certified facilities. The Cylinder Division Engineering Department must be notified in the event of a mechanical fracture or permanent deformation of any cylinder component (excluding seals). This includes a broken piston rod, tie rod, mounting accessory or any other cylinder component. The notification should include all operation and application details. This information will be used to provide an engineered repair that will prevent recurrence of the failure.

It is allowed to disassemble cylinders for the purpose of replacing seals or seal assemblies. However, this work must be done by strictly following all the instructions provided with the seal kits.

⚠**PROP 65 WARNING** **WARNING:** This product can expose you to chemicals including **Lead and Lead Compounds** which are known to the State of California to cause cancer and birth defects or other reproductive harm. For more information go to www.P65Warnings.ca.gov

The items described in this document and other documents and descriptions provided by Parker Hannifin Corporation, its subsidiaries and its authorized distributors ("Seller") are hereby offered for sale at prices to be established by Seller. This offer and its acceptance by any customer ("Buyer") shall be governed by all of the following Terms and Conditions. Buyer's order for any item described in its document, when communicated to Seller verbally, or in writing, shall constitute acceptance of this offer. All goods, services or work described will be referred to as "Products".

1. Terms. All sales of Products by Seller are expressly conditioned upon, and will be governed by the acceptance of, these Terms. These Terms are incorporated into any Quote provided by Seller to Buyer. Buyer's order for any Products whether communicated to Seller verbally, in writing, by electronic data interface or other electronic commerce, shall constitute acceptance of these Terms. Seller objects to any contrary or additional terms or conditions of Buyer. Reference in Seller's order acknowledgement to Buyer's purchase order or purchase order number shall in no way constitute an acceptance of any of Buyer's terms or conditions of purchase. No modification to these Terms will be binding on Seller unless agreed to in writing and signed by an authorized representative of Seller.

2. Price; Payment. The Products set forth in the Quote are offered for sale at the prices indicated in the Quote. Unless otherwise specifically stated in the Quote, prices are valid for thirty (30) days and do not include any sales, use, or other taxes or duties. Seller reserves the right to modify prices at any time to adjust for any raw material price fluctuations. Unless otherwise specified by Seller, all prices are F.C.A. Seller's facility (INCOTERMS 2020). All sales are contingent upon credit approval and full payment for all purchases is due thirty (30) days from the date of invoice (or such date as may be specified in the Quote). Unpaid invoices beyond the specified payment date incur interest at the rate of 1.5% per month or the maximum allowable rate under applicable law.

3. Shipment; Delivery; Title and Risk of Loss. All delivery dates are approximate, and Seller is not responsible for damages resulting from any delay. Regardless of the manner of shipment, delivery occurs and title and risk of loss or damage pass to Buyer, upon placement of the Products with the carrier at Seller's facility. Unless otherwise agreed prior to shipment and for domestic delivery locations only, Seller will select and arrange, at Buyer's sole expense, the carrier and means of delivery. When Seller selects and arranges the carrier and means of delivery, freight and insurance costs for shipment to the designated delivery location will be prepaid by Seller and added as a separate line item to the invoice. Buyer shall be responsible for any additional shipping charges incurred by Seller due to Buyer's acts or omissions. Buyer shall not return or repackage any Products without the prior written authorization from Seller, and any return shall be at the sole cost and expense of Buyer.

4. Warranty. The warranty for the Products is as follows: (i) Goods are warranted against defects in material or workmanship for a period of eighteen (18) months from the date of delivery or 2,000 hours of use, whichever occurs first; (ii) Services shall be performed in accordance with generally accepted practices and using the degree of care and skill that is ordinarily exercised and customary in the field to which the Services pertain and are warranted for a period of six (6) months from the date of completion of the Services; and (iii) Software is only warranted to perform in accordance with applicable specifications provided by Seller to Buyer for ninety (90) days from the date of delivery or, when downloaded by a Buyer or end-user, from the date of the initial download. All prices are based upon the exclusive limited warranty stated above, and upon the following disclaimer: **EXEMPTION CLAUSE; DISCLAIMER OF WARRANTY, CONDITIONS, REPRESENTATIONS: THIS WARRANTY IS THE SOLE AND ENTIRE WARRANTY, CONDITION, AND REPRESENTATION, PERTAINING TO PRODUCTS. SELLER DISCLAIMS ALL OTHER WARRANTIES, CONDITIONS, AND REPRESENTATIONS, WHETHER STATUTORY, EXPRESS OR IMPLIED, INCLUDING BUT NOT LIMITED TO THOSE RELATING TO DESIGN, NONINFRINGEMENT, MERCHANTABILITY, AND FITNESS FOR A PARTICULAR PURPOSE. SELLER DOES NOT WARRANT THAT THE SOFTWARE IS ERROR-FREE OR FAULT-TOLERANT, OR THAT BUYER'S USE THEREOF WILL BE SECURE OR UNINTERRUPTED. UNLESS OTHERWISE AUTHORIZED IN WRITING BY SELLER, THE SOFTWARE SHALL NOT BE USED IN CONNECTION WITH HAZARDOUS OR HIGH RISK ACTIVITIES OR ENVIRONMENTS. EXCEPT AS EXPRESSLY STATED HEREIN, ALL PRODUCTS ARE PROVIDED "AS IS".**

5. Claims; Commencement of Actions. Buyer shall promptly inspect all Products upon receipt. No claims for shortages will be allowed unless reported to Seller within ten (10) days of delivery. Buyer shall notify Seller of any alleged breach of warranty within thirty (30) days after the date the non-conformance is or should have been discovered by Buyer. Any claim or action against Seller based upon breach of contract or any other theory, including tort, negligence, or otherwise must be commenced within twelve (12) months from the date of the alleged breach or other alleged event, without regard to the date of discovery.

6. LIMITATION OF LIABILITY. IN THE EVENT OF A BREACH OF WARRANTY, SELLER WILL, AT ITS OPTION, REPAIR OR REPLACE THE NON-CONFORMING PRODUCT, RE-PERFORM THE SERVICES, OR REFUND THE PURCHASE PRICE PAID WITHIN A REASONABLE PERIOD OF TIME. **IN NO EVENT IS SELLER LIABLE FOR ANY SPECIAL, INDIRECT, INCIDENTAL OR CONSEQUENTIAL DAMAGES INCLUDING ANY LOSS OF REVENUE OR PROFITS, WHETHER BASED IN CONTRACT, TORT OR OTHER LEGAL THEORY. IN NO EVENT SHALL SELLER'S LIABILITY UNDER ANY CLAIM MADE BY BUYER EXCEED THE PURCHASE PRICE PAID FOR THE PRODUCTS.**

7. Confidential Information. Buyer acknowledges and agrees that any technical, commercial, or other confidential information of Seller, including, without limitation, pricing, technical drawings or prints and/or part lists, which has been or will be disclosed, delivered or made available, whether directly or indirectly, to Buyer ("Confidential Information"), has been and will be received in confidence and will remain the property of Seller. Buyer further agrees that it will not use Seller's Confidential Information for any purpose other than for the benefit of Seller.

8. Loss to Buyer's Property. Any tools, patterns, materials, equipment or information furnished by Buyer or which are or become Buyer's property ("Buyer's Property"), will be considered obsolete and may be destroyed by Seller after two (2) consecutive years have elapsed without Buyer ordering the Products manufactured using Buyer's Property. Furthermore, Seller shall not be responsible for any loss or damage to Buyer's Property while it is in Seller's possession or control.

9. Special Tooling. "Special Tooling" includes but is not limited to tools, jigs, fixtures and associated manufacturing equipment acquired or necessary to manufacture Goods. Seller may impose a tooling charge for any Special Tooling. Such Special Tooling shall be and remain Seller's property notwithstanding payment of any charges by Buyer. In no event will Buyer acquire any interest in the Special Tooling, even if such Special Tooling has been specially converted or adapted for manufacture of Goods for Buyer and notwithstanding any charges paid by Buyer. Unless otherwise agreed, Seller has the right to alter, discard or otherwise dispose of any Special Tooling or other property owned by Seller in its sole discretion at any time.

10. Security Interest. To secure payment of all sums due from Buyer, Seller retains a security interest in all Products delivered to Buyer and, Buyer's acceptance of these Terms is deemed to be a Security Agreement under the Uniform Commercial Code. Buyer authorizes Seller as its attorney to execute and file on Buyer's behalf all documents Seller deems necessary to perfect Seller's security interest.

11. User Responsibility. Buyer, through its own analysis and testing, is solely responsible for making the final selection of the Products and assuring that all performance, endurance, maintenance, safety and warning requirements of the application of the Products are met. Buyer must analyze all aspects of the application and follow applicable industry standards, specifications, and any technical information provided with the Quote or the Products, such as Seller's instructions, guides and specifications. If Seller provides options of or for Products based upon data or specifications provided by Buyer, Buyer is responsible for determining that such data and specifications are suitable and sufficient for all applications and reasonably foreseeable uses of the Products. In the event Buyer is not the end-user of the Products, Buyer will ensure such end-user complies with this paragraph.

12. Use of Products, Indemnity by Buyer. Buyer shall comply with all instructions, guides and specifications provided by Seller with the Quote or the Products. Unauthorized Uses. If Buyer uses or resells the Products in any way prohibited by Seller's instructions, guides or specifications, or Buyer otherwise fails to comply with Seller's instructions, guides and specifications, Buyer acknowledges that any such use, resale, or non-compliance is at Buyer's sole risk. Further, Buyer shall indemnify, defend, and hold Seller harmless from any losses, claims, liabilities, damages, lawsuits, judgments and costs (including attorney fees and defense costs), whether for personal injury, property damage, intellectual property infringement or any other claim, arising out of or in connection with: (a) improper selection, design, specification, application, or any misuse of Products; (b) any act or omission, negligent or otherwise, of Buyer; (c) Seller's use of patterns, tools, equipment, plans, drawings, designs, specifications or other information or things furnished by Buyer; (d) damage to the Products from an external cause, repair or attempted repair by anyone other than Seller, failure to follow instructions, guides and specifications provided by Seller, use with goods not provided by Seller, or opening, modifying, deconstructing, tampering with or repackaging the Products; or (e) Buyer's failure to comply with these Terms. Seller shall not indemnify Buyer under any circumstance except as otherwise provided in these Terms.

13. Cancellations and Changes. Buyer may not cancel or modify, including but not limited to movement of delivery dates for the Products, any order for any reason except with Seller's written consent and upon terms that will indemnify, defend and hold Seller harmless against all direct, incidental and consequential loss or damage and any additional expense. Seller, at any time, may change features, specifications, designs and availability of Products.

14. Limitation on Assignment. Buyer may not assign its rights or obligations without the prior written consent of Seller.

15. Force Majeure. Seller is not liable for delay or failure to perform any of its obligations by reason of events or circumstances beyond its reasonable control. Such circumstances include without limitation: accidents, labor disputes or stoppages, government acts or orders, acts of nature, pandemics, epidemics, other widespread illness, or public health emergency, delays or failures in delivery from carriers or suppliers, shortages of materials, war (whether declared or not) or the serious threat of same, riots, rebellions, acts of terrorism, fire or any reason whether similar to the foregoing or otherwise. Seller will resume performance as soon as practicable after the event of force majeure has been removed. All delivery dates affected by force majeure shall be tolled for the duration of such force majeure and rescheduled for mutually agreed dates as soon as practicable after the force majeure condition ceases to exist. Force majeure shall not include financial distress, insolvency, bankruptcy, or other similar conditions affecting one of the parties, affiliates and/or sub-contractors.

16. Waiver and Severability. Failure to enforce any provision of these Terms will not invalidate that provision; nor will any such failure prejudice either party's right to enforce that provision in the future. Invalidation of any provision of these Terms shall not invalidate any other provision herein and, the remaining provisions will remain in full force and effect.

17. Termination. Seller may terminate any agreement governed by or arising from these Terms for any reason and at any time by giving Buyer thirty (30) days prior written notice. Seller may immediately terminate, in writing, if Buyer: (a) breaches any provision of these Terms, (b) becomes or is deemed insolvent, (c) appoints or has appointed a trustee, receiver or custodian for all or any part of Buyer's property, (d) files a petition for relief in bankruptcy on its own behalf, or one is filed against Buyer by a third party, (e) makes an assignment for the benefit of creditors; or (f) dissolves its business or liquidates all or a majority of its assets.

18. Ownership of Software. Seller retains ownership of all Software supplied to Buyer hereunder. In no event shall Buyer obtain any greater right in and to the Software than a right in the nature of a license limited to the use thereof and subject to compliance with any other terms provided with the Software.

19. Indemnity for Infringement of Intellectual Property Rights. Seller is not liable for infringement of any patents, trademarks, copyrights, trade dress, trade secrets or similar rights ("Intellectual Property Rights") except as provided in this Section. Seller will defend at its expense and will pay the cost of any settlement or damages awarded in an action brought against Buyer based on a third party claim that one or more of the Products sold hereunder infringes the Intellectual Property Rights of a third party in the country of delivery of the Products by Seller to Buyer. Seller's obligation to defend and indemnify Buyer is contingent on Buyer notifying Seller within ten (10) days after Buyer becomes aware of any such claim, and Seller having sole control over the defense of the claim including all negotiations for settlement or compromise. If one or more Products sold hereunder is subject to such a claim, Seller may, at its sole expense and option, procure for Buyer the right to continue using the Products, replace or modify the Products so as to render them non-infringing, or offer to accept return of the Products and refund the purchase price less a reasonable allowance for depreciation. Seller has no obligation or liability for any claim of infringement: (i) arising from information provided by Buyer; or (ii) directed to any Products provided hereunder for which the designs are specified in whole or part by Buyer; or (iii) resulting from the modification, combination or use in a system of any Products provided hereunder. The foregoing provisions of this Section constitute Seller's sole and exclusive liability and Buyer's sole and exclusive remedy for claims of infringement of Intellectual Property Rights.

20. Governing Law. These Terms and the sale and delivery of all Products are deemed to have taken place in, and shall be governed and construed in accordance with, the laws of the State of Ohio, as applicable to contracts executed and wholly performed therein and without regard to conflicts of laws principles. Buyer irrevocably agrees and consents to the exclusive jurisdiction and venue of the courts of Cuyahoga County, Ohio with respect to any dispute, controversy or claim arising out of or relating to the sale and delivery of the Products.

21. Entire Agreement. These Terms, along with the terms set forth in the main body of any Quote, forms the entire agreement between the Buyer and Seller and constitutes the final, complete and exclusive expression of the terms of sale and purchase. In the event of a conflict between any term set forth in the main body of a Quote and these Terms, the terms set forth in the main body of the Quote shall prevail. All prior or contemporaneous written or oral agreements or negotiations with respect to the subject matter shall have no effect. These Terms may not be modified unless in writing and signed by an authorized representative of Seller.

22. Compliance with Laws. Buyer agrees to comply with all applicable laws, regulations, and industry and professional standards, including those of the United States of America, and the country or countries in which Buyer may operate, including without limitation the U.S. Foreign Corrupt Practices Act ("FCPA"), the U.S. Anti-Kickback Act ("Anti-Kickback Act"), U.S. and E.U. export control and sanctions laws ("Export Laws"), the U.S. Food Drug and Cosmetic Act ("FDCA"), and the rules and regulations promulgated by the U.S. Food and Drug Administration ("FDA"), each as currently amended. Buyer agrees to indemnify, defend, and hold harmless Seller from the consequences of any violation of such laws, regulations and standards by Buyer, its employees or agents. Buyer acknowledges that it is familiar with all applicable provisions of the FCPA, the Anti-Kickback Act, Export Laws, the FDCA and the FDA and certifies that Buyer will adhere to the requirements thereof and not take any action that would make Seller violate such requirements. Buyer represents and agrees that Buyer will not make any payment or give anything of value, directly or indirectly, to any governmental official, foreign political party or official thereof, candidate for foreign political office, or commercial entity or person, for any improper purpose, including the purpose of influencing such person to purchase Products or otherwise benefit the business of Seller. Buyer further represents and agrees that it will not receive, use, service, transfer or ship any Products from Seller in a manner or for a purpose that violates Export Laws or would cause Seller to be in violation of Export Laws. Buyer agrees to promptly and reliably provide Seller all requested information or documents, including end-user statements and other written assurances, concerning Buyer's ongoing compliance with Export Laws. 08/2020

Parker's Motion & Control Technologies

At Parker, we're guided by a relentless drive to help our customers become more productive and achieve higher levels of profitability by engineering the best systems for their requirements. It means looking at customer applications from many angles to find new ways to create value. Whatever the motion and control technology need, Parker has the experience, breadth of product and global reach to consistently deliver. No company knows more about motion and control technology than Parker. For further info call 1 800 C-Parker (1 800 272 7537)



Aerospace

Key Markets

Aftermarket services
Commercial transports
Engines
General & business aviation
Helicopters
Launch vehicles
Military aircraft
Missiles
Power generation
Regional transports
Unmanned aerial vehicles

Key Products

Control systems & actuation products
Engine systems & components
Fluid conveyance systems & components
Fluid metering, delivery & atomization devices
Fuel systems & components
Fuel tank inerting systems
Hydraulic systems & components
Thermal management
Wheels & brakes



Climate Control

Key Markets

Agriculture
Air conditioning
Construction Machinery
Food & beverage
Industrial machinery
Life sciences
Oil & gas
Precision cooling
Process
Refrigeration
Transportation

Key Products

Accumulators
Advanced actuators
CO_2 controls
Electronic controllers
Filter driers
Hand shut-off valves
Heat exchangers
Hose & fittings
Pressure regulating valves
Refrigerant distributors
Safety relief valves
Smart pumps
Solenoid valves
Thermostatic expansion valves



Electromechanical

Key Markets

Aerospace
Factory automation
Life science & medical
Machine tools
Packaging machinery
Paper machinery
Plastics machinery & converting
Primary metals
Semiconductor & electronics
Textile
Wire & cable

Key Products

AC/DC drives & systems
Electric actuators, gantry robots & slides
Electrohydrostatic actuation systems
Electromechanical actuation systems
Human machine interface
Linear motors
Stepper motors, servo motors, drives & controls
Structural extrusions



Filtration

Key Markets

Aerospace
Food & beverage
Industrial plant & equipment
Life sciences
Marine
Mobile equipment
Oil & gas
Power generation & renewable energy
Process
Transportation
Water Purification

Key Products

Analytical gas generators
Compressed air filters & dryers
Engine air, coolant, fuel & oil filtration systems
Fluid condition monitoring systems
Hydraulic & lubrication filters
Hydrogen, nitrogen & zero air generators
Instrumentation filters
Membrane & fiber filters
Microfiltration
Sterile air filtration
Water desalination & purification filters & systems



Fluid & Gas Handling

Key Markets

Aerial lift
Agriculture
Bulk chemical handling
Construction machinery
Food & beverage
Fuel & gas delivery
Industrial machinery
Life sciences
Marine
Mining
Mobile
Oil & gas
Renewable energy
Transportation

Key Products

Check valves
Connectors for low pressure fluid conveyance
Deep sea umbilicals
Diagnostic equipment
Hose couplings
Industrial hose
Mooring systems & power cables
PTFE hose & tubing
Quick couplings
Rubber & thermoplastic hose
Tube fittings & adapters
Tubing & plastic fittings



Hydraulics

Key Markets

Aerial lift
Agriculture
Alternative energy
Construction machinery
Forestry
Industrial machinery
Machine tools
Marine
Material handling
Mining
Oil & gas
Power generation
Refuse vehicles
Renewable energy
Truck hydraulics
Turf equipment

Key Products

Accumulators
Cartridge valves
Electrohydraulic actuators
Human machine interfaces
Hybrid drives
Hydraulic cylinders
Hydraulic motors & pumps
Hydraulic systems
Hydraulic valves & controls
Hydrostatic steering
Integrated hydraulic circuits
Power take-offs
Power units
Rotary actuators
Sensors



Pneumatics

Key Markets

Aerospace
Conveyor & material handling
Factory automation
Life science & medical
Machine tools
Packaging machinery
Transportation & automotive

Key Products

Air preparation
Brass fittings & valves
Manifolds
Pneumatic accessories
Pneumatic actuators & grippers
Pneumatic valves & controls
Quick disconnects
Rotary actuators
Rubber & thermoplastic hose & couplings
Structural extrusions
Thermoplastic tubing & fittings
Vacuum generators, cups & sensors



Process Control

Key Markets

Alternative fuels
Biopharmaceuticals
Chemical & refining
Food & beverage
Marine & shipbuilding
Medical & dental
Microelectronics
Nuclear Power
Offshore oil exploration
Oil & gas
Pharmaceuticals
Power generation
Pulp & paper
Steel
Water/wastewater

Key Products

Analytical Instruments
Analytical sample conditioning products & systems
Chemical injection fittings & valves
Fluoropolymer chemical delivery fittings, valves & pumps
High purity gas delivery fittings, valves, regulators & digital flow controllers
Industrial mass flow meters/controllers
Permanent no-weld tube fittings
Precision industrial regulators & flow controllers
Process control double block & bleeds
Process control fittings, valves, regulators & manifold valves



Sealing & Shielding

Key Markets

Aerospace
Chemical processing
Consumer
Fluid power
General industrial
Information technology
Life sciences
Microelectronics
Military
Oil & gas
Power generation
Renewable energy
Telecommunications
Transportation

Key Products

Dynamic seals
Elastomeric o-rings
Electro-medical instrument design & assembly
EMI shielding
Extruded & precision-cut, fabricated elastomeric seals
High temperature metal seals
Homogeneous & inserted elastomeric shapes
Medical device fabrication & assembly
Metal & plastic retained composite seals
Shielded optical windows
Silicone tubing & extrusions
Thermal management
Vibration dampening

ENGINEERING YOUR SUCCESS.

Visit us on the web
www.parker.com/cylinder

11/20 / Catalog HY08-1314-2/NA

Parker Hannifin Corporation
Cylinder Division
500 South Wolf Road
Des Plaines, IL 60016 USA
phone (847) 298-2400
fax (800) 892-1008
www.parker.com/cylinder